A TIME-DOMAIN SIMULATION FRAMEWORK OF AN IPR-BASED SHIPBOARD INTEGRATED POWER SYSTEM

by

Christian A. Feliciano Bonilla

A thesis submitted in partial fulfillment of the requirements for the degree of

MASTER OF SCIENCES
in
ELECTRICAL ENGINEERING

UNIVERSITY OF PUERTO RICO
MAYAGÜEZ CAMPUS
2006

Approved by:

Agustín A. Irizarry Rivera, PhD Member, Graduate Committee	Date
Efraín O'Neill Carrillo, PhD Member, Graduate Committee	Date
Carlos Cuadros Ortiz, PhD Member, Graduate Committee	Date
Bienvenido Vélez Rivera, PhD President, Graduate Committee	Date
Antonio A. González Quevedo, PhD Representative of Graduate Studies	Date
Isidoro Couvertier Reyes, PhD Chairperson of the Department	Date

ABSTRACT

A real-time simulation framework of a shipboard integrated power system is developed in this work, with the main purpose of adding to the system a new modular device called Intelligent Power Router (IPR). The IPR is a device with embedded intelligence that distributed over the electric network monitors the system continuously. In case of any contingency the IPR establishes a communication link with other neighboring IPR's to coordinate a reconfiguration scheme, and in this manner improve the reliability, security and survivability of the power system. The IPR can control the generators, supply or shed loads, but its fundamental action is to alter the topologic structure of the electric system changing the status of switches (ON/OFF) for controlling the lines where the electric power will flow. The objective is to supply power to vital and semi-vital loads first, such as communication, propulsion and weapon systems, and then supply non-vital loads with any remaining power. The proposed architecture of the IPR, how these devices are connected to the electric system and the algorithm used by the IPR to react on different types of contingencies are some of the contributions introduced in this thesis. The simulations show that the DD(X) shipboard electric system with the IPR is reconfigured automatically in the majority of the experimental scenarios in a decentralized manner and with acceptable recovery times for this type of reconfiguration scheme.

RESUMEN

En este trabajo desarrollamos una plataforma de simulación en tiempo real para un sistema integrado de potencia de un barco, con el propósito principal de añadir al sistema un nuevo dispositivo llamado Enrutador Inteligente de Potencia (IPR, por sus siglas en inglés). El IPR es un dispositivo con inteligencia interna que distribuido en la red eléctrica monitorea el sistema continuamente. En caso de ocurrir alguna contingencia, el IPR establece vías de comunicación con los enrutadores vecinos para coordinar un esquema de reconfiguración, y de esta manera aumentar la confiabilidad, seguridad y sobrevivencia del sistema de potencia. El IPR puede controlar los generadores, suplir o rechazar cargas, pero su acción primordial es la de alterar la estructura topológica del sistema eléctrico cambiando el estatus de interruptores (encendido/apagado), controlando así las líneas por donde fluirá la potencia eléctrica. El objetivo es suplirle potencia a cargas vitales y semi-vitales primero, como los sistemas de comunicación, propulsión y armas, para luego atender las cargas no-vitales con el remanente de potencia disponible. En esta tesis presentamos la arquitectura propuesta del IPR, cómo estos dispositivos se conectan al sistema eléctrico y el algoritmo utilizado para reaccionar a distintos tipos de contingencias. Las simulaciones demuestran que el sistema integrado de potencia de un barco DD(X) con el IPR se reconfigura automáticamente en la mayoría de los escenarios explorados de manera descentralizada y en tiempos de recuperación aceptables para este tipo de esquema de reconfiguración.

To God,

to my family,

to my unconditional friends. . .

ACKNOWLEDGEMENTS

First I want to thank God for giving me the strength, the health and the encouragement to finish one of my most longed dreams. Also I want to give my sincere gratitude to professors, Dr. Agustín Irizarry, Dr. José Cedeño, Dr. Carlos Cuadros for their support, especially to my advisor Dr. Bienvenido Vélez for offering me his friendship and sharing his ideas with me during the last two years to complete this work. Thanks to Dr. Efraín O'Neill for his unconditional help and counsels since my undergraduate courses. I want to thank also all my research partners, "EPNES Kids": Marianela, Carlos, Janeth, Alfredo, Idálides, Oliver and all my master partners.

Finally, but more important, thanks to my family for trusting in me, for all its affection, and by teaching me that all is earned by working hard and with sacrifice. Thanks to my best friends for offering me their friendship and motivation in every moment.

This work was supported by the National Science Foundation thru award number 0224743 as well as by the University of Puerto Rico - Mayagüez Campus.

TABLE OF CONTENTS

TABLE LIST

Tables **Page**

FIGURE LIST

Figures **Page**

1 INTRODUCTION

1.1 Overview

Electric power systems of ships supply energy to sophisticated systems for weapons, communications, navigation and operation. In this new era of the U.S. Navy with goals to reduce manning and increase system survivability, automatic reconfiguration of the electrical network in a shipboard power system is critical for quickly restoring service to sections of the power system to survive battle damage [1]. Future Navy surface combatants will be commissioned with significantly higher demands for electric power to support electric drives propulsion, high energy weapon systems, electrical auxiliary systems, and network centric warfare [2]. This turns the electric system into the most vital system inside the ship. The ship electric system complexity, structure, response time and many other predominant factors will define the behavior of the other systems interconnected to it. These interdependent and automated systems will require dynamic control that can adapt in response to mission demands, and reconfigure the systems in case of battle damage or internal faults.

Loads such as the electric propulsion motors and high power weapons place huge demands of energy on the power system, frequently matching the generation capacity. This poses new challenges in the area of design and fault detection. Systems faults should be isolated separating the portion of the system where the fault occurred from the rest. If a missile attacks in an area causing multiple faults on multiple service lines, the

protection devices should separate the affected zones from the others or should carry out a load shedding scheme to adjust the load demand to the available generation. A key design goal of the power system is to provide alternate power paths to critical electrical loads such as combat systems, propulsion and fire-fighting resources. The system must be capable of seamlessly transferring power during fault conditions since a small glitch in power to a weapon system may have catastrophic results [3].

Typical protection systems have certain problems in supplying the critical devices and systems during battle or fault conditions. The control strategies that are implemented in these cases are often not sufficiently effective to recover the system; therefore human intervention is necessary to restore the system manually. New techniques are being developed that make use of advanced monitoring and control, automated failure location, and automated intelligent system reconfiguration and restoration. The goal is to increase survivability, eliminate human mistakes, make intelligent reconfiguration decisions more quickly, reduce the manpower required to perform the functions, and provide optimal electric power service through the surviving system [4]. Many resemblances exist among a military ship trying to survive to a missile attack and a hospital or a police station trying to survive to a natural disaster or terrorist attack. So an attempt to automate the electric power systems will benefit both the military and civilian sectors.

1.2 Problem Statement

The central objective of this research is to improve the models and methods used to solve the reconfiguration problem for shipboard power systems. The power system models used in previous shipboard reconfiguration research provided a good basis for the introduction of reconfiguration methods and techniques. However, these models were based on conventional U.S. Navy power systems and may not accurately represent future Integrated Power Systems (IPS). Some of the challenges introduced by future naval systems are real time monitoring for the purpose of fault analysis and automatic reconfiguration to avoid interruption of vital control communication and computer systems caused by damage or faults to the ship.

Keeping in mind all these requirements introduced by the next generation of shipboard power systems we have developed a model using a distributed concept based on scalable coordination by Intelligent Power Router (IPR). Our goal is to demonstrate that distributing the network intelligence and control functions using the IPR, the system will have improved survivability, security, reliability, and reconfigurability. Each IPR have embedded intelligence, allowing it to switch power lines, shed load and receive/transmit local state variables information to and from other neighboring routers. The information exchange capability of the routers provides coordination among themselves to reconfigure the network, even when the designated principal control center of the system has collapsed due to a natural or man-made disaster [5].

1.3 Objectives

The approach of this research is to develop a time-domain simulation framework for an IPR-based shipboard power system. This will help in the analysis of reconfiguration schemes for these types of power systems and thus improve the survivability, security and reliability of the electric network. The framework development process will be divided in the following tasks:

- Design a modular simulation model for an IPR.
- Design communication protocols for IPR's including messages types, communication schemes and routing algorithms.
- Develop an IPR-based shipboard power system with real characteristics.
- Design and implement a distributed control algorithm for IPR's.
- Determine the reliability increase of the power system operating with IPR's, simulating various scenarios.

1.4 Outline of the Dissertation

This document consists of nine chapters. Chapter 1 is this introductory section. Chapter 2 provides a literary review of completed work in related areas of research. Chapter 3 describes the Intelligent Power Routers' functions, objectives and reliability. Chapter 4 describes the IPR model developed. Chapter 5 provides insight on the implementation of the IPR controller algorithm. Chapter 6 presents the all-electric ship

framework used for the experiments. Chapter 7 presents the experimental results achieved with the IPR-based shipboard framework. Chapter 8 describes briefly the use of power electronics in future naval systems. Finally, the conclusions of the study and some recommendations for future work are presented in Chapter 9.

2 LITERATURE REVIEW

Traditionally, the U.S. Navy has kept the ship electric generation system separate from the mechanical propulsion system (figure 2.1). Advances in electric motors and their correspondent drives have made the U.S. Navy support this kind of motor instead of their mechanical counterparts; basically for the increase on power transfer efficiency. The introduction of large electric motors posed a new challenge: coupling the electric generation system with the propulsion system. This new arrangement shown in figure 2.2 is called an Integrated Power System (IPS), and offers many advantages over traditional systems. Some of these advantages are: less human intervention, disperse generators in various locations of the ship, and less power losses; making the ship more survivable to battle damage than before.

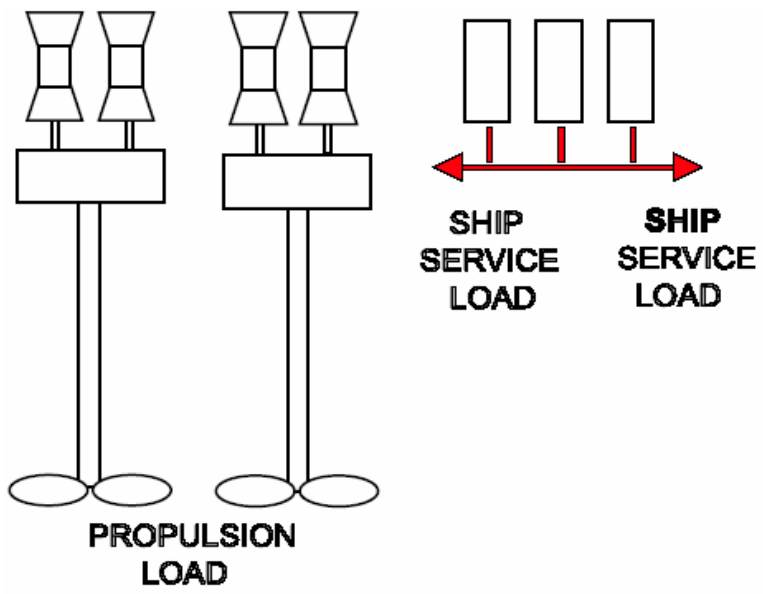

Figure 2.1 Existing Traditional Power System.

Because the generator's prime movers are located in different parts of the ship, not near the propulsion system as it was traditionally done, the target area of the enemy is reduced, so both the electric and propulsion systems can continue working although the ship has been attacked. To take advantage of the survivability concept mentioned before, the electric power system has to be capable to reconfigure itself in the case that a zone of the system shuts down due to component malfunction or battle damage. Automation of advanced systems is driven by cost and performance requirements which may be summarized as [6]:

- The need to shift labor intensive functions from humans to machines to reduce operational costs.
- Control law complexity and time constraints which exceed human capabilities.

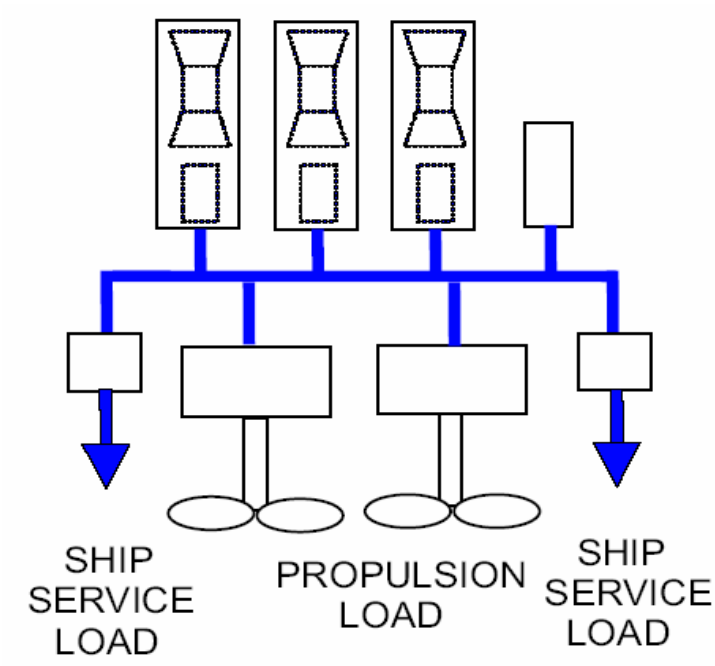

Figure 2.2 Future Integrated Shipboard Power System.

This implies having a system with the capacity of intelligent self-reconfiguration that switches power sources, sheds loads and takes other remedial measures necessary to maximize systems capacity in the events of faults. It is important that all these measures and decisions be executed in the fastest way possible to avoid that vital systems like propulsion and combat systems shut down or suffer from any critical damage. The power system together with an intelligent computer network will be the responsible for taking the necessary actions to reconfigure the electric power grid of the future Navy ships.

There is an urgent need for innovative methods and tools to formulate, design, validate, operate, and maintain dependable control systems for mission/life critical, complex, interdependent systems [7]-[9]. Of particular interest is the survivable, automated control of advanced, integrated electrical power systems [10]-[11]. The power electric grid of any ship will be the more important support system aboard these future ships, what implies that the complexity, response speed and the stability requirements of the power electric grid will dominate all of the other support systems on board ships. Also, these ships will have weapons and other components demanding high consumption of power, sometimes with the same magnitude as the power generation capacity. This introduces the problem of finite inertia on the ship, and presents the challenge of differentiating normal operation transients from transients caused by faults or battle damage. The power components in the ship are coupled finite inertia systems, so any fault can propagate quickly causing major power interruptions in other ship zones. The

essential goal is to *provide continuous mobility, power, and thermal management for shipboard combat systems despite major disruptions involving cascading failures* [2].

2.1 Shipboard Power System Architecture

Presently on the Navy ships three-phase electric power is generated and distributed in an ungrounded delta configuration to assure the operation of the system in a line to hull fault [12]. The reason for this is that large fault currents are prohibited to pass because there is no low impedance path. As a consequence, the protection devices of that section of the network will not be tripped and vital loads will not lose power during critical moments. In addition, if a phase results in an open circuit for any reason, the system will be able to continue functioning in a balanced manner; although with less capacity in an open-delta configuration [3]. The generation voltages levels are 450V AC with a frequency of 60 Hz. The system is connected in such a form that the generators remain in a ring shape, thus can be able to supply power to any load in the system, specially the vital ones. The power is transmitted and controlled through various components like switchgear units, breakers, load center switchboards, power distribution panels, bus transfer units and transformers connected near generators, and loads [13]. Bus tie circuits interconnect the generators to form a ring configuration. The generators and their respective switchboards are placed in different ship zones, thus a critical blackout can be avoided in case of a device malfunction or battle damage.

The loads require power at 440, 115 and 4160V with a frequency of 60 Hz and at 440, 115 and 4160V with a frequency of 400 Hz. The loads at the higher frequency are generally associated to command and surveillance systems, weapon systems and aircraft support systems. The loads at 4160V are associated with the propulsion system, and the aircraft launch system [14]. To allow changes in frequency, a motor-generator set is used. A power electronic converter can also be used.

The typical electric system of a ship is shown in figure 2.3. The generators in normal operation and some available for emergency cases, can be visualized. The components mentioned previously are also visible with other components called automatic and manual bus transfers (ABT/MBT), utilized to supply power in every moment to vital loads [4].

2.2 Shipboard Electric Distribution Systems

A radial architecture suffers from a number of deficiencies. If a portion of a line is lost due to a failure or physical damage, all the loads from that point on will be lost, unless alternate paths exists. At present, this radial distribution architecture of the shipboard power system is being compared with a zonal architecture (figure 2.4) that subdivides the ship in some zones delineated by physical watertight bulkhead compartments [15]. A high voltage ring runs around the internal perimeter of the ship

and each bulkhead contains only two points where the electric cables can penetrate, one in the port side and another in the starboard side. Protection devices will be placed to electrically separate each zone from adjacent zones in case of emergency. The advantage of the zonal architecture can be summarized by having greater flexibility on the reconfiguration and restoration algorithms, besides the reduction on electric wiring, since the switchboard feeders that go from the generators to each load, are now found at their corresponding zones and are in charge of providing power only to their zone. Each zone contains two load centers, one supplied from the port bus and the other from the starboard

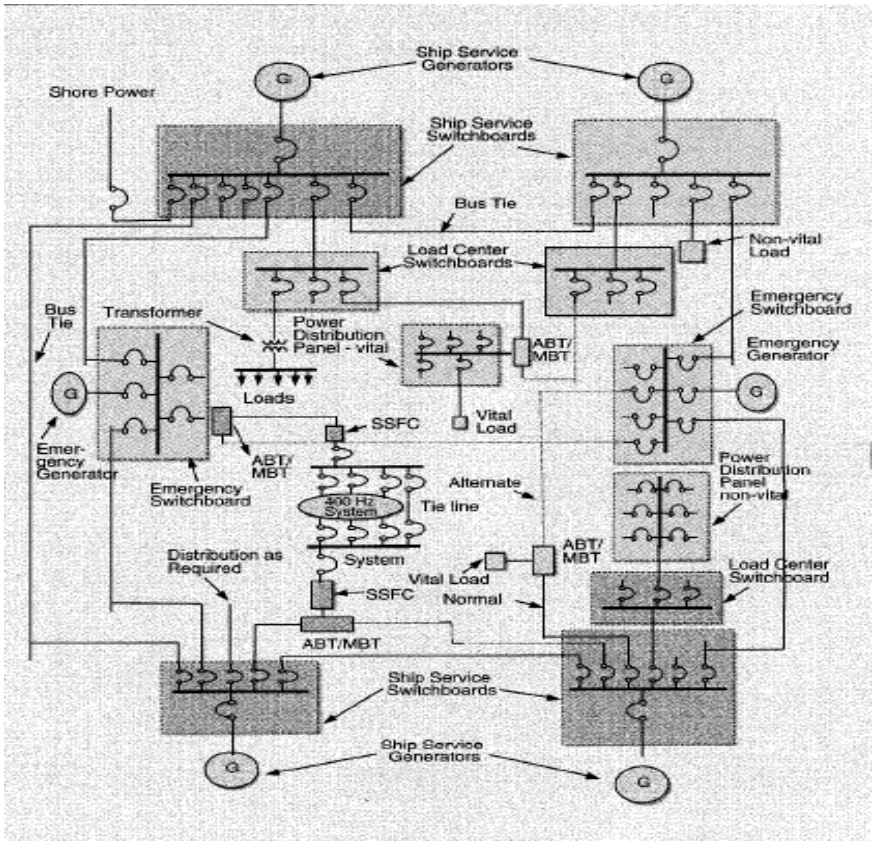

Figure 2.3 Typical Ship Electric Distribution System [4].

bus. The loads connected to these load centers are classified as non-vital, semi-vital and vital. The vital loads and the semi-vital are those required for the weapons systems, propulsion system, etc. The non-vital loads are the ones that can be shed to maintain the survivability of the ship. These loads can be supplied from the nearest load center to save cable and are also categorized, because if the priorities of the loads change, these never could change and convert into vital or semi-vital loads. Both load centers can provide normal and alternate power using the automatic bus transfers existing in each zone for the semi-vital and vital loads [16].

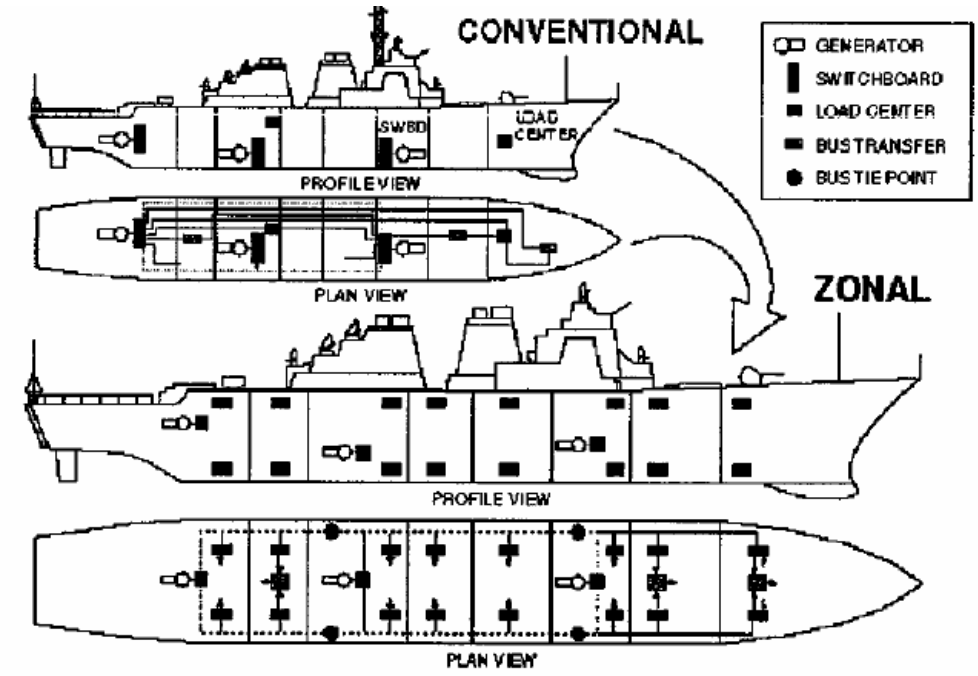

Figure 2.4 Conventional vs. Zonal Distribution Architecture [3].

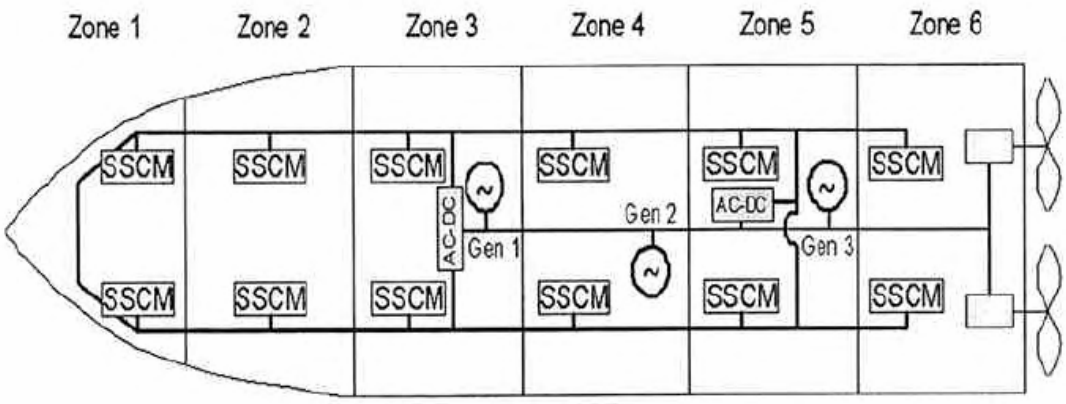

Figure 2.5 Combination AC/DC Zonal Power System [16].

Presently, the electric wiring is installed by hand onboard ships pulling it trough the various compartments of the ship. The zonal architecture will facilitate the production of the ships since the electric wiring of a zone can be installed while that zone of the ship is built, and at the same time the electric equipment of that zone can be tested. A zonal architecture would reduce the costs of material and work by $1.373M by ship [15].

Different types of electric distributions for the ship are being studied by the power systems research community: DC distribution system, AC distribution system and the AC/DC combined distribution system. One of the multiple architectures that can be built using a combined distribution system is shown in figure 2.5. The U.S. Navy seems to be in favor of the AC/DC combined distribution, but this distribution and the DC have developed the implementation of the Power Electronic Building Block (PEBB) into the infrastructure of the ship. The PEBB as a power electronic device would interrupt the

DC current when automatic switching is required to clear a fault. Without a PEBB will be difficult to interrupt a DC current since there is no zero-crossing as in the AC current.

There are some advantages when using the DC zonal electric distribution system DC (DC ZEDS). One of these is the ease to clear faults of an electric zone because DC current disturbances are easier to detect that AC, so the current sensors and algorithms required to detect fault conditions are simpler and faster. Another advantage is the reduction in power conversion stages, since inside the ship there are various components that require a frequency of 400 Hz at different voltage levels [16]. With an AC system the power has to be rectified, converted to 400 Hz by an inverter and then converted again to DC. The disadvantages of a DC distribution system are mainly associated with the main bus voltage. The present technology is based on the power semiconductors: insulated –gate-bipolar-transistor (IGBT) and the MOS-controlled-thyristor (MCT) that has voltage ratings in an order of 1,500 to 2,000V. This limits the admissible voltage in the main bus and limits the use of weapons of high pulse energy that require voltages in the order of 15,000V. The DC distribution, used in the majority of the reconfiguration research projects in ship electric systems, is the less favored approach. This system seems to be viable only if the motors are DC motors. However, it is reasonable to develop a DC distribution system model to create a base for the AC and the combined AC/DC distribution systems. In addition, this model can be a good approximation for the simplicity of calculations that require less computation time.

The Office of Naval Research (ONR) DC zonal electric distribution reference system (ZEDS) represents a future ship integrated power system, available for the control system design and simulation on the MATLAB/Simulink platform. This system is shown in figure 2.6. Some of the system characteristics are [2]:

1. Two finite inertia AC sources and buses.
2. AC bus dynamics, stability, and regulation.
3. Redundant DC power supplies and zonal distribution buses.
4. DC bus dynamics, stability and regulation.
5. Three zonal distribution zones feed by redundant DC power buses.
6. A variety of dynamic and nonlinear loads.

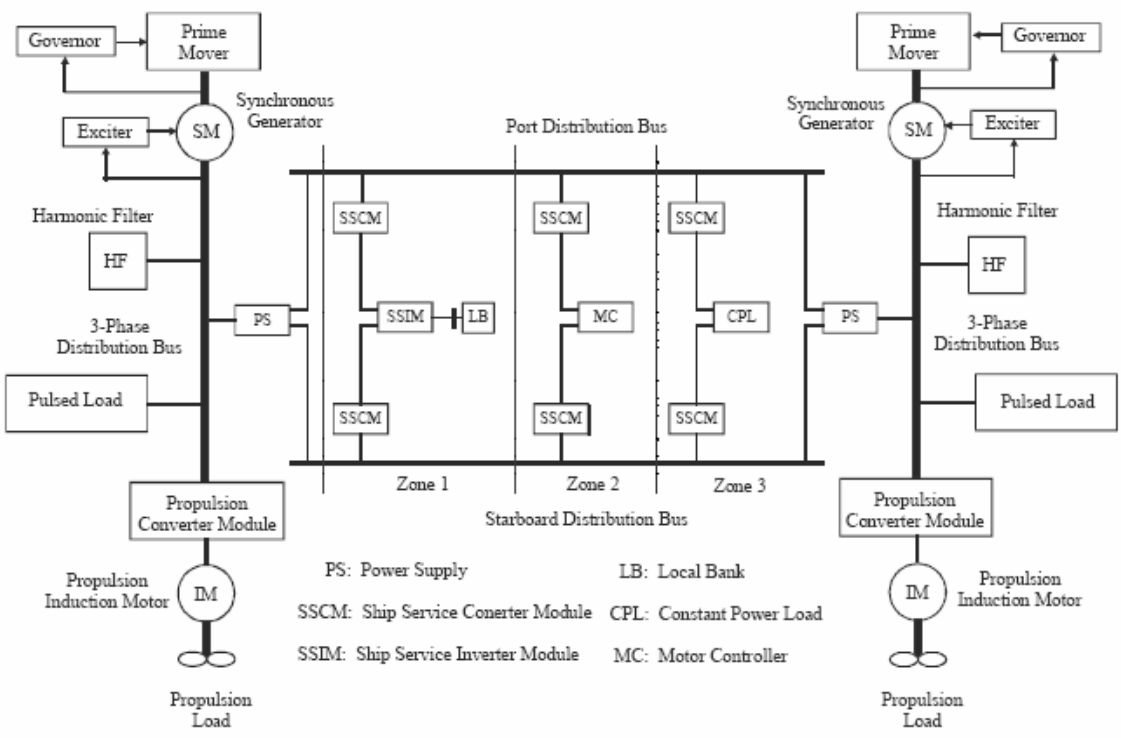

Figure 2.6 ONR DC ZEDS Shipboard Reference System [2].

The Center for Electromechanics at the University of Texas is presently focusing on the development of a comprehensive model of a ship power systems that reflects the power system architectures desired for future electric ships. The goal of this model is to predict the behavior of the integrated power system under prescribed conditions and to assess the effects of individual components on the overall power system, a well as the performance of the technologies they encompass [17]. An integrated power system, besides having advantages such as fuel savings, better performance and redundancy, also provides space for the integration of high power electric weapons like electromagnetic railguns. These weapons require pulsed power in the order of tens of gigawatts, which implies that some energy storage device is necessary to satisfy the power consumption used by these weapons. Some of these energy storage devices include flywheels, capacitors, batteries, fuel cells and super-conducting magnetic energy storage systems.

The power system model, developed by the Center of Electromechanics at the University of Texas, reflects the DD(X) future ship power system architecture built on the MATLAB/Simulink/(Power System Blockset) platform. It is a model that represents the AC/DC combined distribution system as can be observed in figure 2.7. The components and parameters of the model are based on published data related to the power system projected for the future DD(X) ships. The model consists of four gas turbines, four synchronous generators, switchboards, two propulsion transformers, two propulsion rectifiers, two PWM drives and two permanent-magnet propulsion motors.

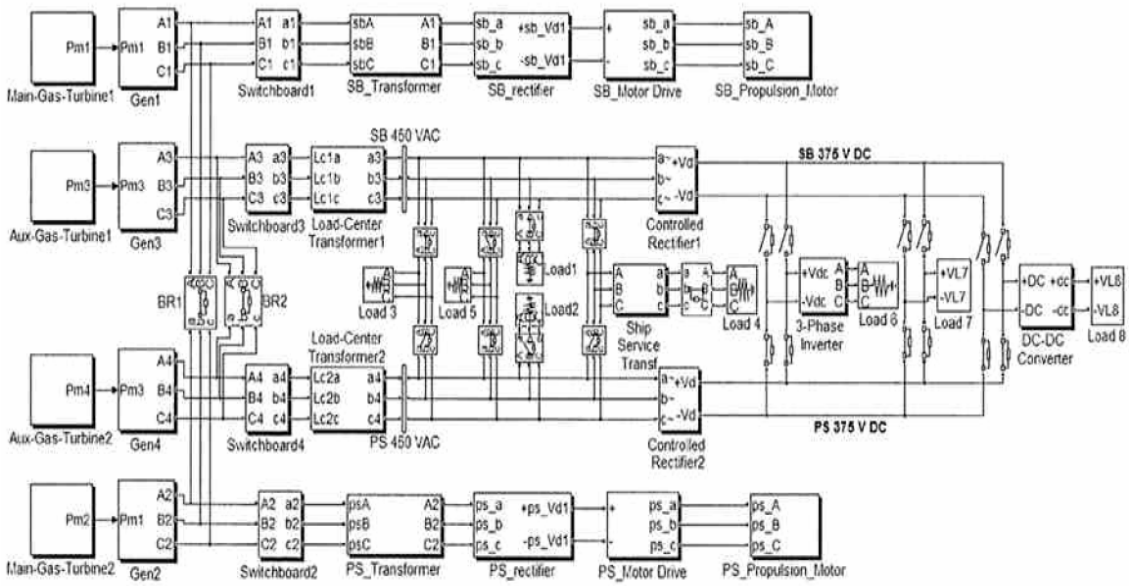

Figure 2.7 DD(X) Power System Model [17].

The ship service section of the model has two load-center transformers, two rectifiers, a ship-service transformer, an inverter, a DC-DC converter, switches and breakers, and eight different loads. The two main turbines and the two auxiliary are rated respectively at 36 MW and 4 MW; supplying a total power of 80 MW. The generators output voltage of 13.8 kV at a frequency of 60 Hz, which implies that the larger generators are 2-poles machines because their mechanical velocity and electric frequency are 3600 rpm and 60 Hz respectively. This factor affects the machine's size directly and is a very important aspect to have in mind because the high power density requirement of future ships [17]. Although a frequency of 60 Hz is the preferred alternative by the Navy community, does not imply that 60 Hz will be the optimum generation frequency in terms of power density and efficiency. PWM inverters were chosen as motor drives in the model due to the

effectiveness and continuous improvement in performance. Among the eight loads of the model are included vital and non-vital loads when the zonal architecture is considered. The magnitudes of these loads are chosen in such form that they reflect Navy ships typical loads.

Vital loads 3, 4 and 5 are connected and can be supplied by any of the two equivalent buses at 450 VAC / 60Hz, while loads 6, 7 and 8 can be supplied from any of the buses at 375 VDC. The other non-vital loads are supplied from the port or starboard bus. Eventually, all the generators will be connected together so any load in the ship can be supplied by any generator during a reconfiguration scenario.

2.3 Reconfiguration Approaches

Various approaches have been proposed for power systems reconfiguration and restoration. These approaches can be roughly classified into four categories: heuristics, expert systems, mathematical programming and soft computing. Heuristics and expert systems have been used frequently in industry, but both have the drawback that they cannot always find the optimal solution. Mathematical programming can find the optimal solution, but it needs some engineering judgment in the programming to formulate reconfiguration solutions. Soft computing methods are easy to implement, but cannot find the optimal solution, and also need a long computation time. Another new

approach is software agents, which are being utilized in applications of computer science and artificial intelligence. A multi-agent system is a structure composed by various artificial agents, capable of interacting with one another on a controlled environment.

In [18] a decentralized multi-agent approach is proposed for the restoration of power systems on distribution networks. The proposed method consists of various Feeder Agents (FAGs) which act as managers making decisions, and the Load Agents (LAGs) that correspond to the client loads. Figure 2.8 shows the proposed multi-agent restoration system. The Feeder-Agents (FAGs) are implemented in the upper level while the Load-Agents (LAGs) are implemented in the lower level. When the LAGs do not have energy, a message is sent to the upper FAG to restore the loads under its supervision. Then, that FAG begins the negotiation process with neighbor FAGs.

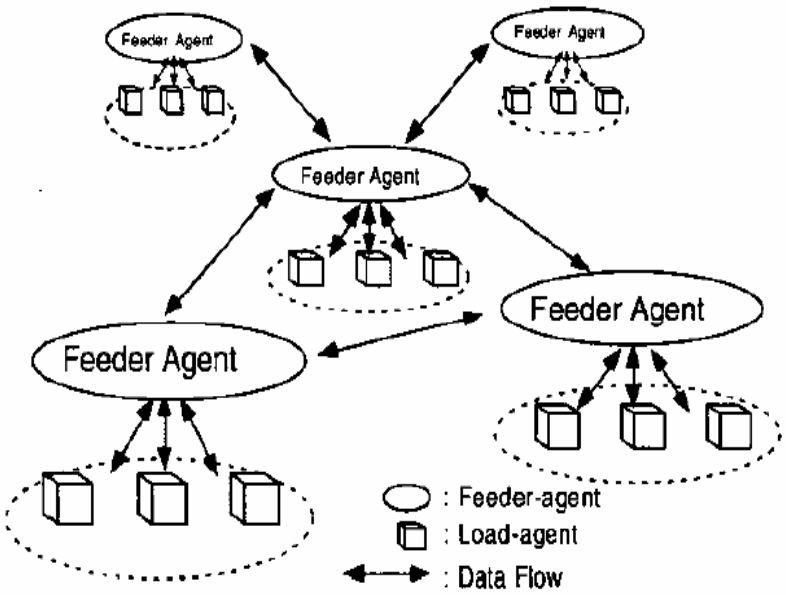

Figure 2.8 Nagata Multi-Agent System Architecture [18].

The purpose of the LAG is to restore the load directly connected to its zone, following some simple rules [18]:

1. If lack of energy is detected, the LAG sends a request message to a FAG to restore the load.
2. If lack of energy is detected, the LAG also opens the neighbor switches for preparation of future restoration operation.
3. If the LAG accomplishes the restoration process, it offers energy to neighbor LAGs.

The purpose of the FAG is to facilitate the negotiation process among the multi-agent system. When the FAG receives the request message to restore its respective LAGs, it tries to restore its LAGs; following some steps learned from past operator experiences.

Butler has an integer-linear programming approach for the post-fault power flow reconfiguration in shipboard power distribution systems. The problem is formulated as a modification of Fixed Charge Network Flow Problem [19]. The proposed method does not require load flow/power flow analysis to verify current capacity or voltage constraints. The method directly suggests the way in which the network should be reconfigured to restore the maximum loads possible complying with the requirements and assuring the radial architecture [20, 21]. Figure 2.9 shows a simplified shipboard power system connected in ring configuration is shown. Some of the loads are connected directly to the load-centers, but others are connected via Automatic Bus Tranfers (ABT) or Manual Bus

Transfers (MBT) to the load-centers. The loads connected by ABT/MBT have an alternate power path additional to the normal path, for use in a case of emergency. Figure 2.10 shows the ABT/MBT and how it is modeled. Only one of the two input terminals of an ABT/MBT can be closed, both cannot be opened or closed at the same time because this violates the radial architecture condition of the power system. Therefore, the main purpose of this approach is to determine the switch position of the Automatic Bus Transfer (ABT) or the Manual Bus Transfer (MBT) after a fault occurs, maximizing the power and the number of loads supplied.

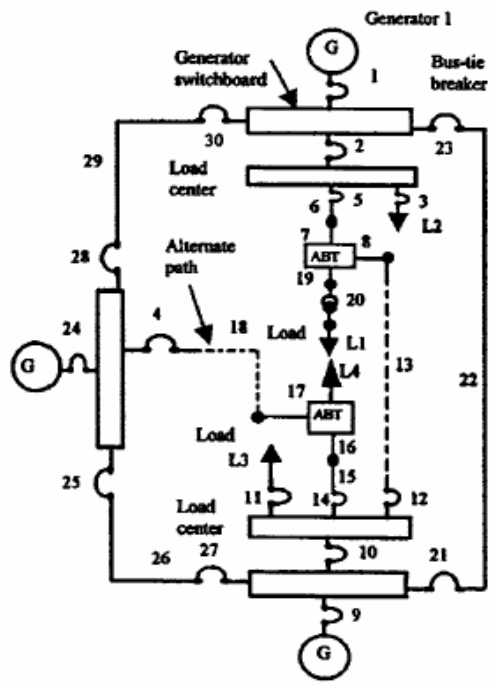

Figure 2.9 Butler Simplified Shipboard Power System [21].

The loads are divided in two types: the variable type that requires power between a value of zero and a maximum magnitude, and the fixed type that can be on or off. Depending on the topology of the network, some constraints are formulated depending on

the load characteristics, like the in and out power flow balance in each node, line capacity, and the voltage ranges for proper load operation. The decision variables associated with the two power input ports of the ABT/MBT and those related to the fixed loads (on or off) are binary variables. Other variables as power flow and voltage take values of real numbers. The constraints and the objective function have lineal behavior; therefore the problem can be resolved using integer-linear programming.

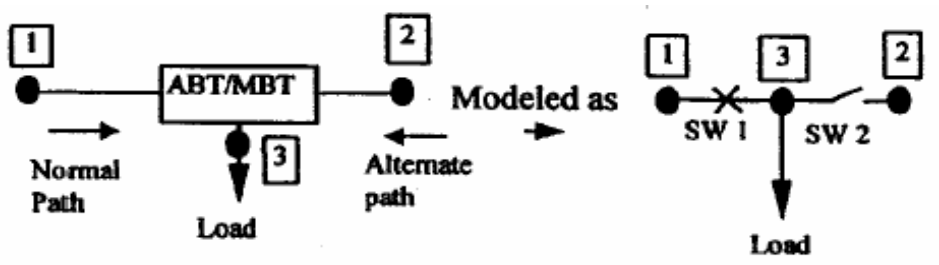

Figure 2.10 Modeling of ABT/MBT [21].

Butler also proposes another reconfiguration method for the shipboard power system, called GENRECON [22]. It not only provides a reconfiguration solution for restoration, but it also provides reconfiguration solutions for mission requirements. In other words, it changes the network from an initial configuration to a desired configuration, based on heuristics. This method requires some system configuration initial details:

- List of loads connected/disconnected to the system
- List of components (cables, circuit breakers, etc.) available
- Magnitude of loads, generation (available capacity)

- Cable ratings
- Loads Priorities
- Connectivity details (what loads are connected to what feeders)

This approach, in contrast with the previous ones, has the notion of non-vital and vital loads. After a failure occurs, the system organizes the loads without power in two classes: vital and non-vital. It arbitrarily chooses vital loads that have an alternate reconfiguration path, and then it verifies that all the loads including the chosen one do not violate any constraint such as current capacity or voltage constraint when the system is reconfigured. The reconfigured loads are removed from the list and the process is repeated, first for all the vital loads and then for all the non-vital.

Davey and Hebner from the Center for Electromechanics at the University of Texas propose a method in which the power system is considered as a grid of interconnected trunk lines, each one with its own equivalent parallel load impedance and series transmission impedance [23]. These equivalent impedances are a tool to reduce large and complex systems into compact ones. The reduced system can be optimized to maximize the power flow through the equivalent parallel impedances and minimize the losses through the series impedances. It is of great utility to represent the system using equivalent pi sections over trunk lines. The condensed system can be computed quickly with voltage and current measures in the branch points. An advantage of this reduction process is that optimal global configurations can be determined; a very complicated task

to carry out in large systems using discrete or continuous variable representations of the switches.

The main purpose of the reconfiguration algorithm is to find the position of the switches that maximize the delivery of power, minimizing the transmission losses, subject to the constraint that the current passing through a line in steady state stays under its rating. Figure 2.11 shows a 16 point grid where the series impedances are represented as Zs and the parallels as Zp. The number of points in the grid is going to vary depending on the system size and in where the power sources will be placed. The load flow will be controlled by the state of the switches. The switches in the terminals of any trunk line cannot be opened or closed at the same time.

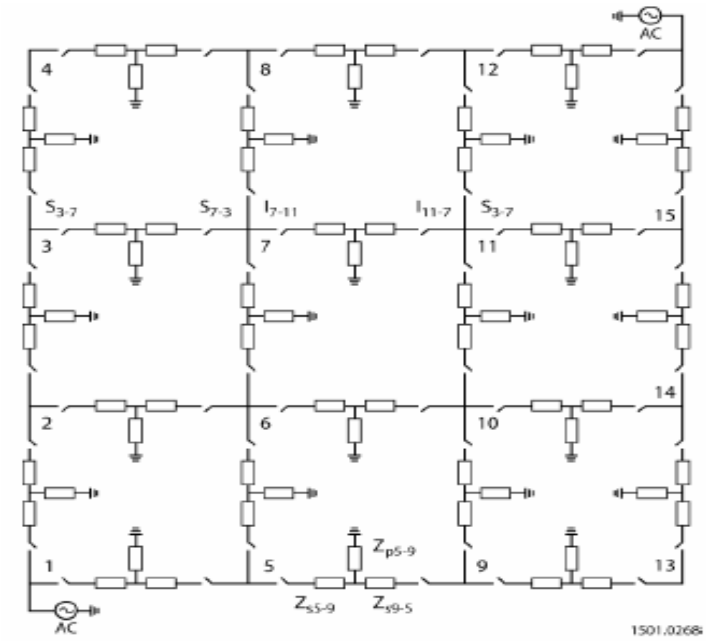

Figure 2.11 Sixteen Point Grid Representation [23].

Khushalani and Schulz [16] propose a change in the method proposed by Butler [22] since the introduction of the combined AC/DC zonal distribution and the distributed generation renders the method obsolete. The reconfiguration problem of the network is dealt as an optimization one. It is required that high priority loads be considered for reconfiguration before those with low priority. The main objective is to maximize the power restoration to semi-vital and vital loads. Therefore, it is required that in the objective function, loads of high priority has larger weight than those with low priority. The constraints imposed in the solution are the power flow, generator capacities, load capacities, line capacities, and voltage constraints. There is a set of constraints for the DC side different from the AC side constraints of the power system. It is assumed that the real power consumed by the DC side is going to be equal to the real power supplied by the AC side. If the system is islanded, the objective is to maximize the restoration of high priority loads and shed the other if necessary. In this method some of the constraints are formulated as binary variables, but the objective utilizes continuous variables. The solution for this proposed method is obtained invoking the non-linear solver of the LINGO software. The method does not need any power flow analysis to verify constraints violation.

3 THE INTEGRATED POWER SYSTEM AND THE INTELLIGENT POWER ROUTER

U.S. Navy ships have maintained their electric generation system separated from the mechanical propulsion system, but technological advances on large capacity electric motors have caused that these motors were chosen as the new propulsion systems for future Navy ships. With this approach the new electric propulsion system can be integrated with the electric generation system, into what now is called the Integrated Power System (IPS). Basically IPS is the term applied to a ship architecture where both ship service loads and the ship propulsion system are supplied from a common electrical source.

Integrated Power Systems offer several advantages over traditional ones. Our research focuses on the survivability advantage of IPS electric power networks. The power system could be reconfigured to cause the minimum energy interruption in an event in which some portion of the system loses it service. The reconfiguration is achieved by intelligently switching electrical sources and shedding loads when necessary. The reconfiguration has to be completed quickly so critical systems can be back online in the minimum time possible during a battle situation. We believe that automated intelligent systems should be incorporated to the power system at the design stage of these ships.

3.1 The Intelligent Power Router (IPR)

Keeping in mind all these requirements for the next generation military and civilian power systems, research professors in the University of Puerto Rico at Mayagüez propose to develop a model for the next generation power network using a distributed concept based on a scalable coordination by an *Intelligent Power Router* (IPR). The goal is to demonstrate that distributing the intelligence of the network and the control over it using the IPR, better survivability, security, reliability and re-configurability can be obtained.

The proposed model has the capacity to distribute the electric power network control, instead of having a main control center. The control is now delegated to intelligent power routers (IPR's) strategically distributed over the electric network. Each power router has embedded intelligence allowing them to switch power lines, shed load based on a priority scheme, activate auxiliary or distributed generation, isolate power regions of the energy delivery network to prevent system cascade failures and receive broadcast local state variable information to and from other routers [5]. The ability of IPR's to exchange information among them will facilitate the electric network to be reconfigured.

The idea of the IPR was inspired by computer networks where the data can be moved over geographically distant nodes by means of data routers. An electric power network can operate in a similar way keeping in mind the physical difference between the

energy exchange and the data exchange. In case that a fault or disturbance occur in some component or to the system, the IPR will make local decisions and will request power from adjacent IPR's when needed. This request exchange will continue until the IPR's converge to a reconfiguration scheme re-establishing the system or at least part of it. Our IPR model is composed of three interrelated stages:

1) Electric system parameters sensing: current, voltage, frequency, temperature, and protection devices status.
2) Reconfiguration logic which takes the sensed parameters information and determines a new network topology based on a load priority scheme.
3) System modification based on the optimal reconfiguration logic decided. The modification is accomplished by sending control signals to the switching devices.

3.1.1 IPR Functionality on a General Power System

Figure 3.1 shows how the IPR is connected to a power system model. The generation units P1, P2 and P3 are connected by means of the electric network to consumers C1, C2,…, Cm. The electric network includes the service lines and the intelligent power routers R1, R2, R3, R4,….., Rk in charge of controlling the paths through which power will flow under normal conditions or when a major system disturbance occur.

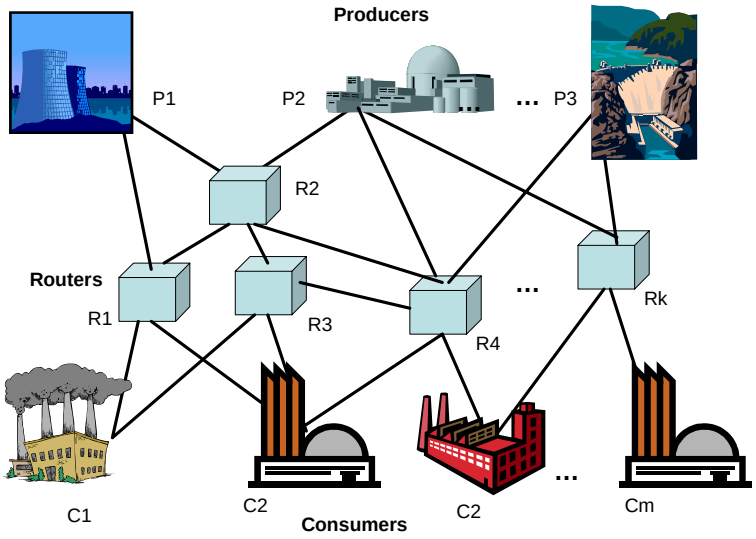

Figure 3.1 Power System with IPR's.

The IPR will be capable of routing power from diverse generation sources to all the consumers connected to the network. Continuous monitoring of variables like current, voltage, frequency, reactive power, among others will help detect unexpected system disturbances or faults. As can be observed in figure 3.1, the IPR controls a series of input lines coming from a generation source or from another adjacent IPR in control of a generation source. The output lines route the power from the IPR directly to the consumers or to another IPR in charge of another consumer area. The routers are organized in a network with multiple redundant paths between the generation sources and the consumers. For the IPR it should not be of importance if the power input came from a direct generation source or from another IPR, the objective is to supply the critical loads keeping in mind the available generation and the service line capacities.

The information monitored by each IPR will be local to itself, to make appropriate decisions and to reconfigure its connected lines in case of a fault or disturbance. When communication between IPR's is required, these local variables will be transmitted among the IPR's that need them, and in this manner a collaborative reconfiguration plan that lets the power flow through the service lines to the loads that need it will evolve. Among the reconfiguration plans, islanding can be included to avoid fault propagation from an area of the system to others, and thus maintain critical loads served. In this way the power network has sufficient redundancy and intelligence to find alternate paths to supply power to the loads, especially to supply critical loads to an acceptable level of operation. It is important to mention that these reconfiguration schemes are accomplished using an automated decentralized control distributed through the entire electric network.

3.2 IPR Proposed Architecture

The IPR architecture is composed of three main subsystems: Computer Hardware, Computer Software and Power Hardware. Figure 3.2 shows the operational relation among these subsystems. The computer hardware will be in charge of CPU functions, system parameters monitoring and the communication among the IPR's. The computer software will be responsible for making decisions depending on the measured system parameters and the information that neighboring IPR's communicate. The power

hardware is composed by power flow control devices responsible of executing the reconfiguration plan determined by the software.

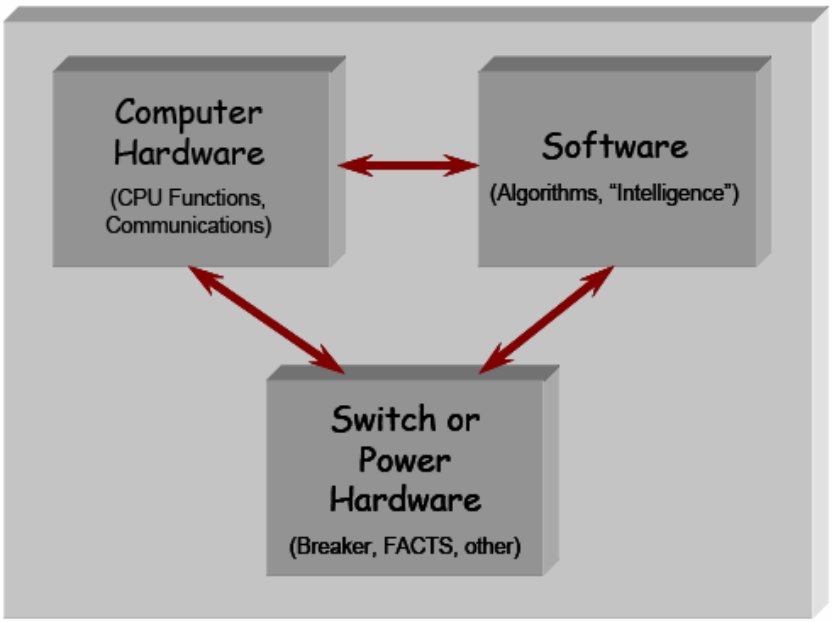

Figure 3.2 Operational Relationship of IPR Subsystems.

Another way to demonstrate the IPR proposed architecture is shown in figure 3.3. It consists of some interfacing circuits and an Intelligent Communication and Control Unit (ICCU). The ICCU monitors the parameters of the lines connected to the IPR. The ICCU also has the intelligence or reconfiguration logic, and the communication protocols used to pass information between IPR's. The interfacing circuits convert the reconfiguration plan decisions determined by the ICCU into control signals for the energy flow control devices.

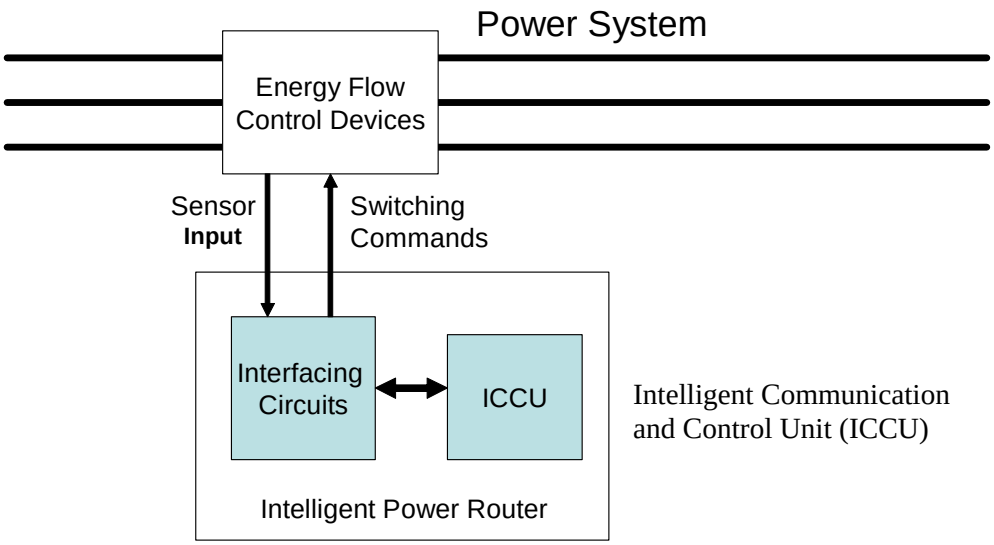

Figure 3.3 IPR Proposed Architecture.

3.2.1 Software

The software implements the algorithms that will decide how the network is going to be reconfigured in case of an unexpected fault or disturbance. The input variables will include the sensed parameters of the local service lines connected directly to each IPR. The result or output of this algorithm specifies the way in which the energy flow control devices will be reconfigured. The energy flow control devices may be closed, open, or in some cases it will control the amount of current or power that will pass through the device toward a zone. In this work the software is implemented using a finite state machine. All IPR's will have the same state machine. In this way we create a modular device, with embedded intelligence, that connected over the electric network will exercise distributed control over it.

3.2.2 Power Hardware

A variety of switching devices can be used to reconfigure the topology of the electric network. The high voltage circuit breaker, the Flexible AC Transmission Systems (FACTS) and high voltage power electronics devices are some examples. Any switching device capable of controlling the power flow through the transmission/distribution lines can serve as an EFCD. In this work a controlled high voltage circuit breaker is used as the switching device for the simulations, but a new power electronic device called Power Electronics Building Block (PEBB) is suggested for future studies.

3.2.3 Computer Hardware

The computer hardware is composed by the parameter sensors utilized to monitor the system and by the technology utilized for the data transmission between the IPR's. The data router will use basically the same technology used for Internet/Ethernet routers. Its work will be to transmit the status of the network obtained from the sensors (PT's, CT's, frequency meters, etc.) to the IPR to which it is directly connected, to the adjacent neighbors IPR’s who require that information, or to the IPR’s to which this IPR sent a power request. In our model a totally reliable wireless connection between the IPR’s is assumed.

4 A SIMULATION MODEL FOR AN IPR

The ship's electric system is a combination of electric circuits and electromechanical devices such as motors and generators. The high efficiency requirement in these two systems has forced the use of new control techniques and power electronics devices, in conjunction with innovative tools and analysis techniques. The introduction of the Intelligent Power Router to an electric system requires the use of a simulation tool that contains adequate component models for this type of electric system topology. The simulation tool should permit the interconnection of models of several disciplines (mechanical, electrical) and should accept some type of programming, because the IPR is a device with embedded intelligence.

The simulation tool used to develop the IPR model and all the components of the ship's electric system was SimPowerSystems, a simulation platform that permits to design detailed power systems models on a user-friendly environment. SimPowerSystems uses the Matlab-Simulink engine, permitting to build systems models using click and drag procedures. The majority of the SimPowerSystems library blocks can interact with blocks of different disciplines including mechanics, thermal and control among others. Because Simulink uses MATLAB® as its computational engine, it could be possible to use other MATLAB toolboxes and Simulink blocksets.

The IPR architecture, shown in figure 4.1, is composed of an Intelligent Communication and Control Unit (ICCU) and some interfacing circuits in charge of receiving the data from the sensors and sending the switching commands to the energy flow control devices. In this chapter, we will discuss the development and implementation models for the energy sensors, the flow control devices, the interfacing circuits and the Intelligent Communication and Control Unit.

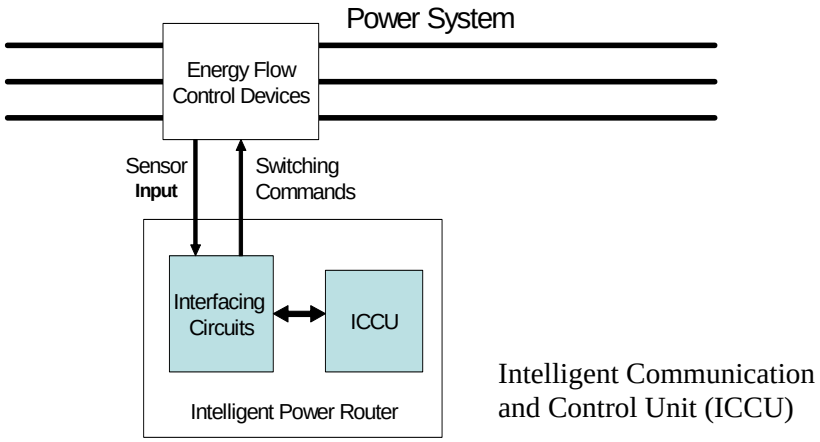

Figure 4.1 IPR Proposed Architecture with ICCU.

4.1 Energy Sensors and Flow Control Devices

In the first generation of IPR's, the electric system parameters measured by the sensors are the phase to ground voltages and the phase currents. With that information the real and reactive power flowing through the lines can be calculated. Power flowing from the generators to the IPR's, power through the lines connecting two IPR's and

power flowing from the IPR to the loads can be calculated. In summary, the power at any point of the power system can be calculated. In this way it is possible to develop an algorithm whose input parameters will be the real and reactive power as scalar variables. Figure 4.2 shows the model of the sensor. As can be seen this device is connected in series with the three-phase line through which the power flows. To the left there is a three-phase voltage and current sensor which passes the measured data to another device which calculates the real and reactive power.

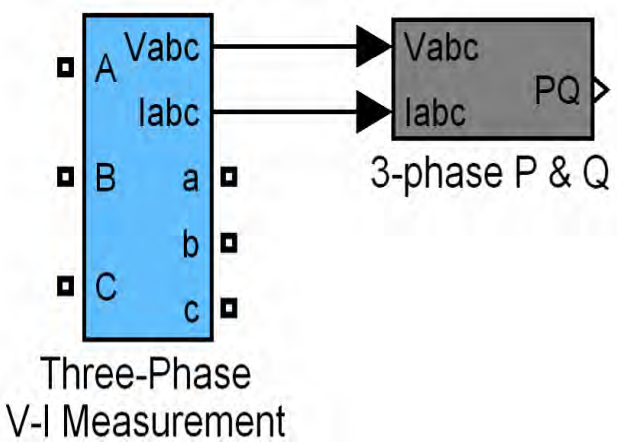

Figure 4.2 Voltage, Current and Power Sensor in SimPowerSystems.

The flow control devices for this first generation of the IPR are simulated using a three-phase breaker block provided by the SimPowerSystems model library. This model, shown in figure 4.3, can be controlled by an external logic signal. A 0 at the input, signals that the breaker must open and a 1 that is must close. These signals will be sent by the ICCU of each IPR after having determined a new reconfiguration topology for the

electric network. Series resistance and capacitance snubber circuits are included in the model. They can be optionally connected to the three individual breaker components of the three-phase breaker model. If the block is in series with an inductive circuit, an open circuit or a current source, the snubber circuits have to be connected.

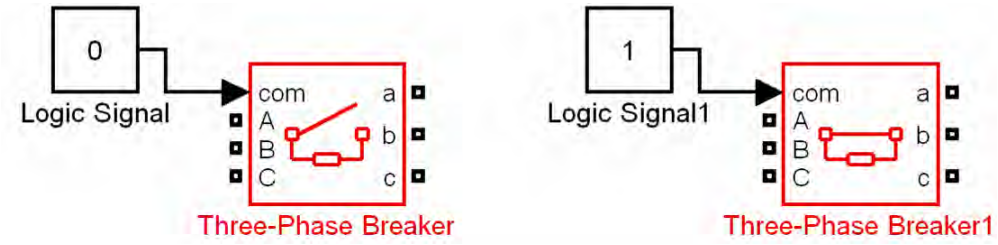

Figure 4.3 Breaker Opening and Closing Signals.

4.2 Interfacing Circuits

The interfacing circuits were modeled using blocks from the Simulink library. They transmit and receive real or complex signals of any data type supported by Simulink. One of the blocks is called the From block. It accepts a signal from a corresponding Goto block, and then passes it as output. The data type of the output is the same as that of the input from the Goto block. From and Goto blocks allow passing a signal from one block to another without actually connecting them. To associate a Goto block with a From Block, one enters the Goto block's tag in the From tag parameter. An example is shown in figure 4.4 where the real and reactive power sensor output is connected to a Goto Block. A From Block with the same tag of the Goto Block receives these signals and

sends them to a scope that plots the signals. As can be seen, there is no cable connection between the two blocks. This permits the From Block to receive signals from any Goto Block connected at any point in the system. In this way we can send the monitored system parameters to the ICCU so the pertaining changes can be made to the electric network topology in the event of a failure. Another application of these blocks as interfacing circuits can be appreciated in figure 4.5. In this example we control the three-phase breakers and at the same time read their status (open or closed). It can be made connecting the From and Goto Blocks at the breaker control input. The From Block connects the control signal originated at the ICCU while the Goto Block collects the device status to send it as input variables to the ICCU.

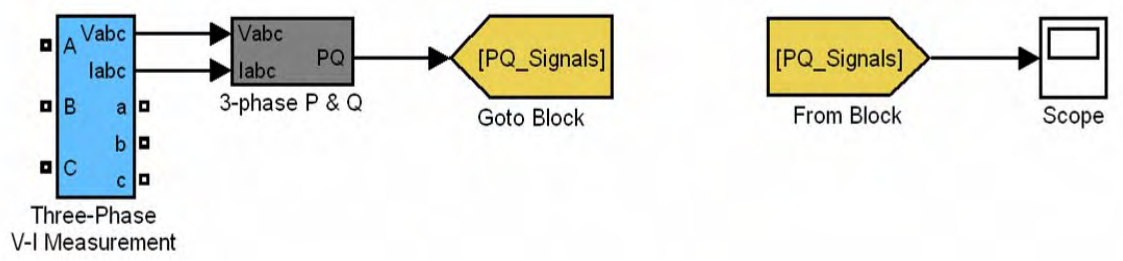

Figure 4.4 Interfacing Circuits Application.

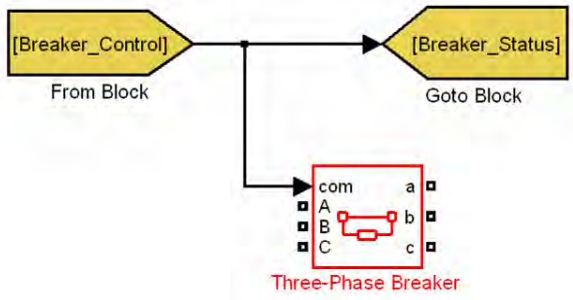

Figure 4.5 Breaker Status and Control Interfacing Circuits.

4.3 Sensors and Switches Module

To obtain a multi-directional control of the power in each IPR, a four port power input/output model was developed. Each one of these ports will have a real and reactive power sensor, a breaker and the interfacing circuits necessary for the information exchange with the ICCU. Figure 4.6 shows all the components connected in one of these ports. The power flow can enter or leave through the connection ports (e.g. Connection Port 1) or the terminals of the three-phase breaker. Connected in series we can see the power sensor, with a display to show the value at each time interval. The interfacing circuit blocks that transmit the port information to the ICCU of the corresponding IPR can also be seen. Connecting four ports of this type we obtain the complete model shown in figure 4.7. The power flow can enter through any of the four ports and can leave through any of the remaining ports.

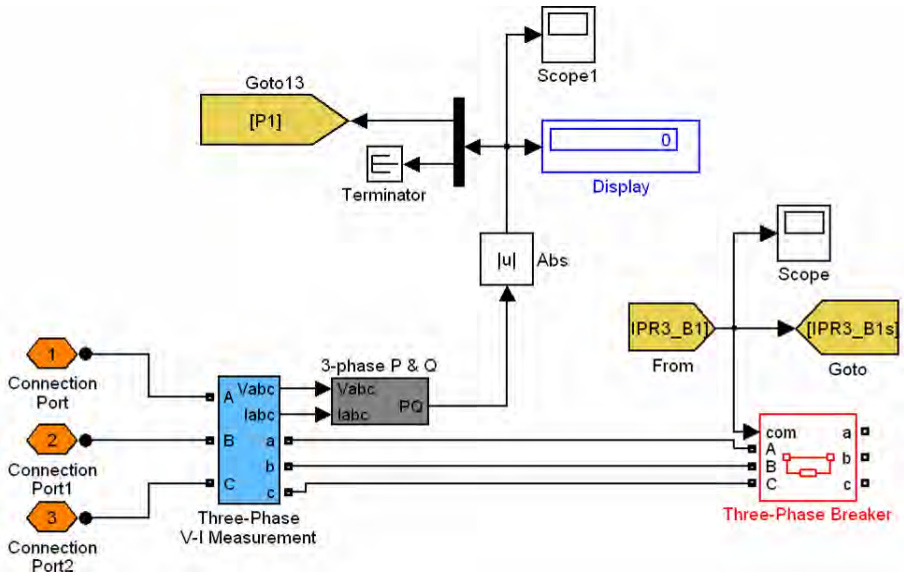

Figure 4.6 Power Input/Output Port with Energy Sensor and Breaker.

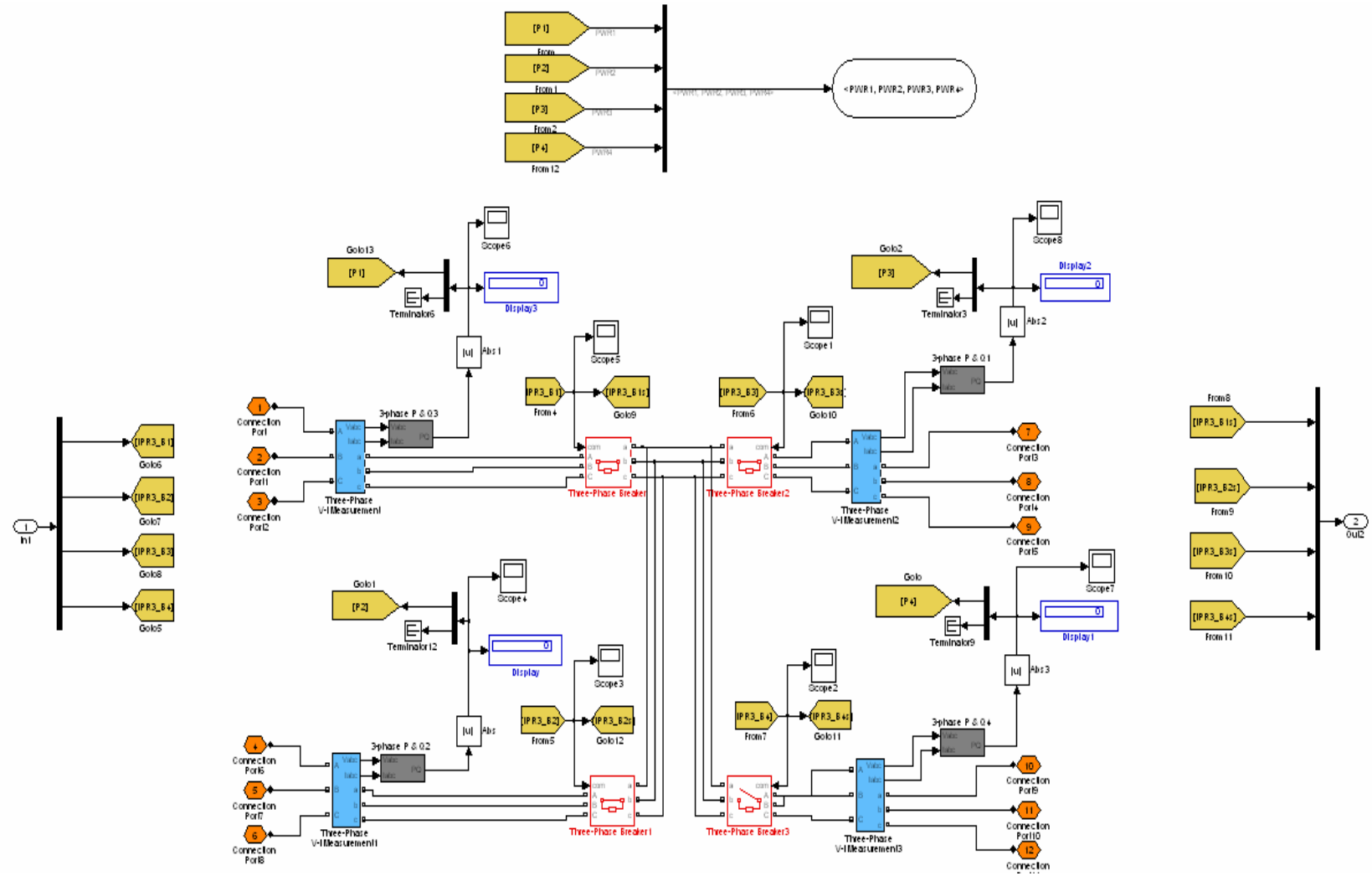

Figure 4.7 Four Port Energy Sensors, Breakers and Interfacing circuits.

If a three-phase energy source is connected directly to port number one, and the breakers of ports one and three are maintained closed, the power flow will take the direction shown in figure 4.8. If the breakers of ports two and four are closed, the power will flow in the directions shown in figure 4.9.

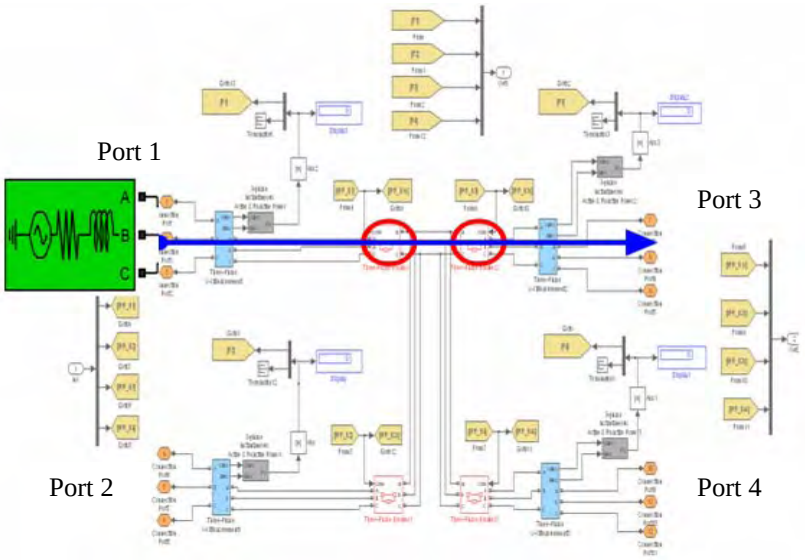

Figure 4.8 Module with Two Breakers Closed and a Generator Connected.

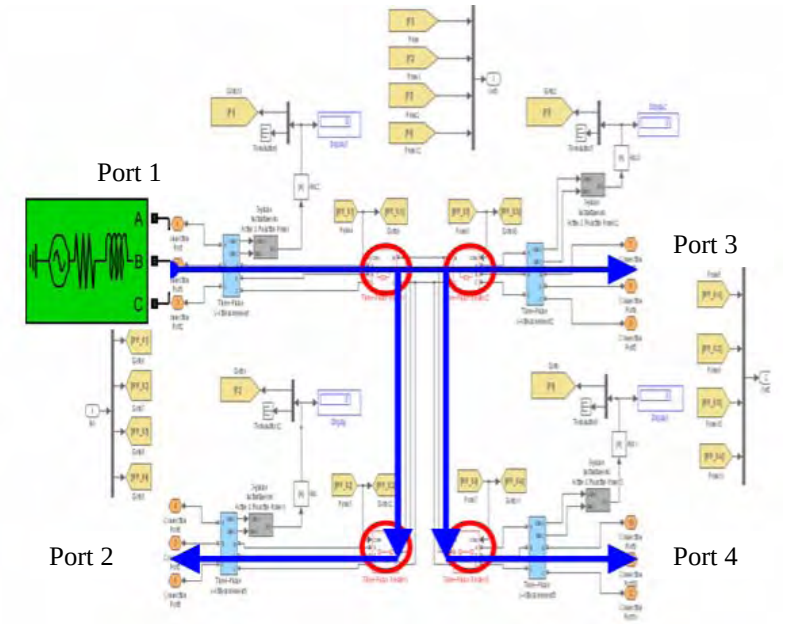

Figure 4.9 Module with Four Breakers Closed and a Generator Connected.

With this configuration we achieve a modular system to control the power flow in several directions. Connecting multiple modules in different system zones will enable the transmission of power from different generators to the connected loads in the system using any of the available transmission lines.

In the next step we must add to the module the intelligence unit that will read the sensor data and the switches state as input. Then, it will calculate a new configuration state for the network topology depending on the input variables mentioned before and information that neighbor IPR's offer or be required from them. The ICCU, responsible for these algorithms will complete the new state for the switches (on/off) and send it to the module. The new system topology will reconfigure the system to supply the critical or vital loads in the smaller possible time.

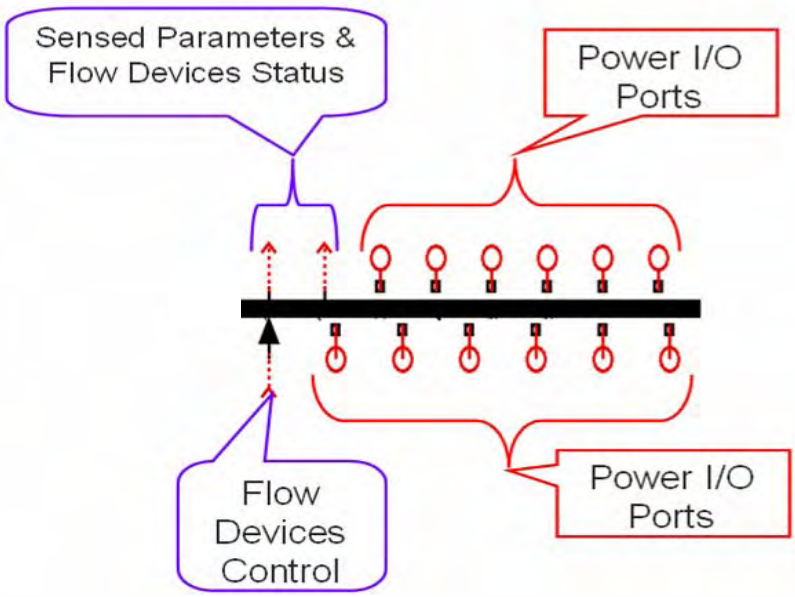

Figure 4.10 Sensors and Switches Encapsulated Energy Flow Control Module.

The EFCD module model shown in detail on figure 4.7 is encapsulated to facilitate the handling of the different modules that will be connected in the network. In figure 4.10 we can visualize the encapsulated system. It contains four input/output three-phase power ports, two outputs containing the ICCU input data (sensed parameters, flow devices status), and an input coming from the ICCU with the switches control data. An important characteristic of this module is that it has the capacity to be connected in series with others to provide more power ports in the event that the system requires it. This can be observed in figure 4.11. The three-phase source supplies six three-phase loads through the modules, having the capacity to shed any load or remove a service line if it is required at any moment.

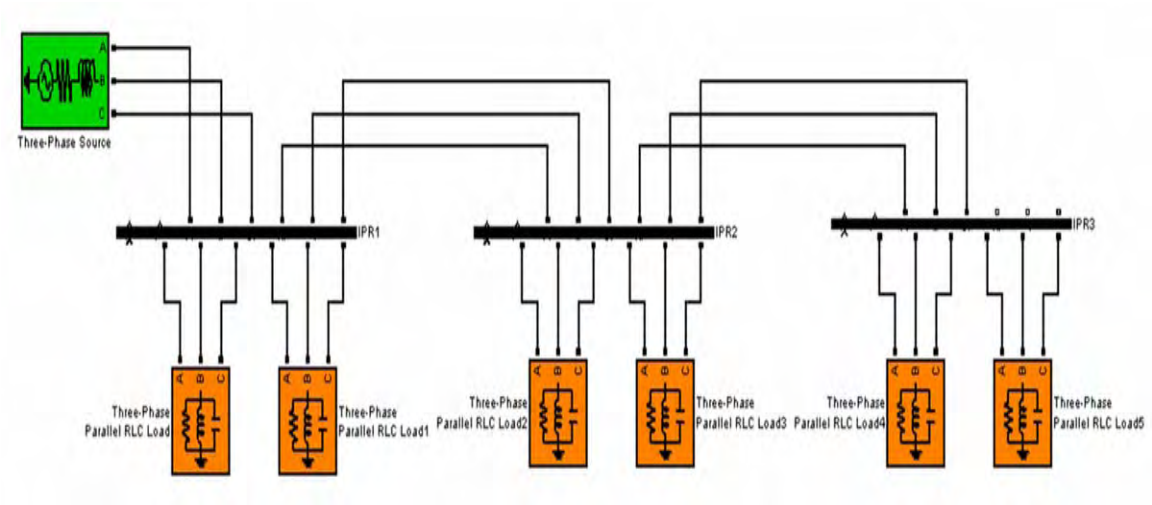

Figure 4.11 Three IPR's with Six Loads Example.

4.4 ICCU Hardware

The Intelligent Communication and Control Unit (ICCU) is responsible for taking all the information measured by the sensors, and depending on the IPR's network and the switches status, calculates a new topology to serve the majority loads connected to the IPR. Also, it has the capacity to communicate with the adjacent neighbors IPR's to know the status of higher priority loads connected. It is important to emphasize that all the IPR's have the same type of ICCU, which links with the sensors and switches module, turning the IPR into a modular device.

To simulate the ICCU we utilized block models found at the Matlab-Simulink program libraries. The communication system was developed following the same interfacing circuits concept discussed previously. Because the IPR can communicate only with their directly connected neighbors, they can exchange information like necessary power needed by priority and also they can serve like a link among not directly connected IPR's. Figure 4.12 shows the ICCU schematic. As can be observed all the components are connected to the IPR main controller.

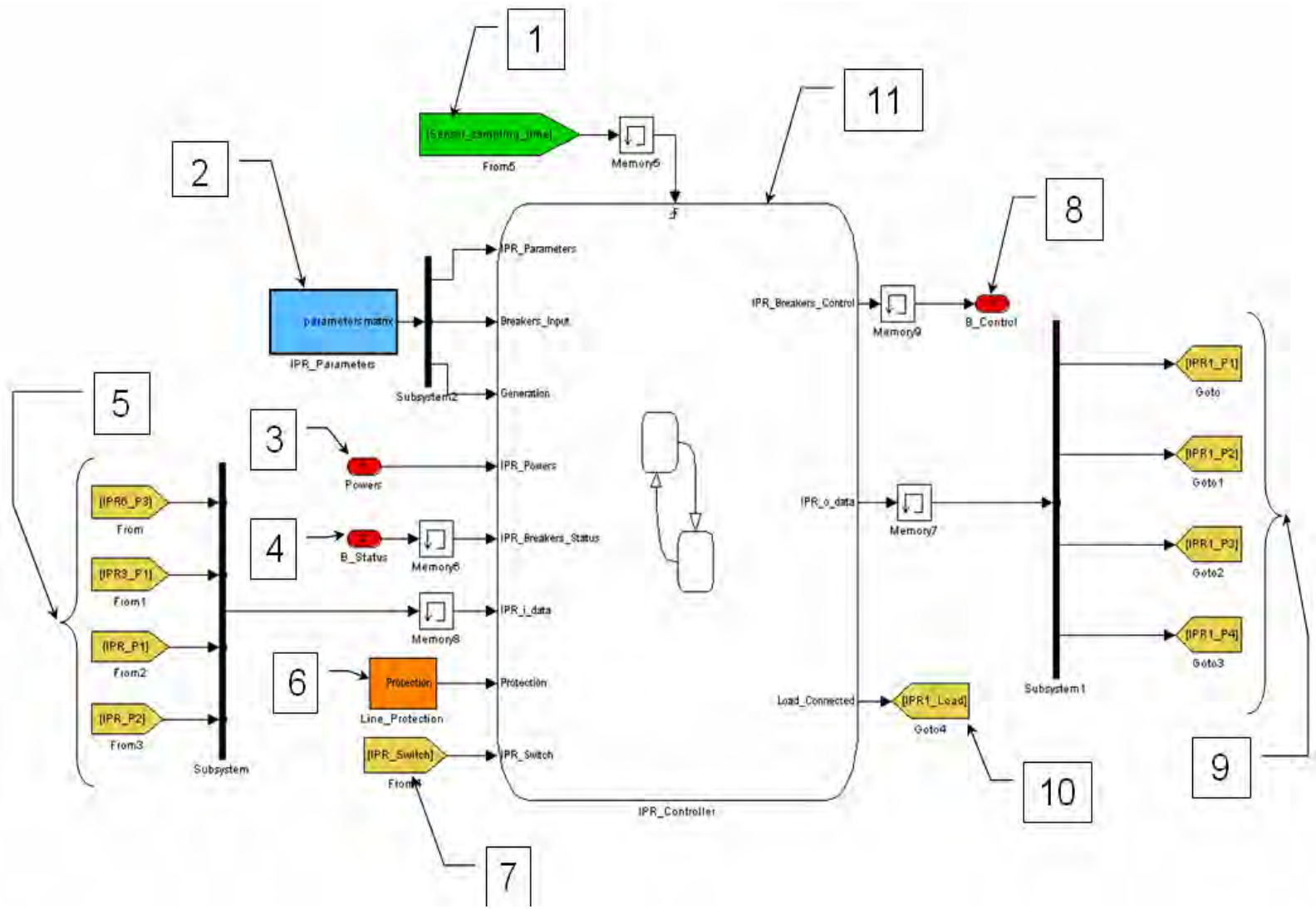

Figure 4.12 IPR ICCU.

Each ICCU component has the following functionality:

1) Sensor sampling time- defines the time interval in which each IPR will read the input data, process the information or will give output data.
2) IPR parameters- IPR detailed parameters by port. Table 4.1 gives us an idea of the type of necessary information by port.

TABLE 4.1 Information Needed by the Controller from the Ports of each IPR.

Port	Port Type	Line Capacity (W)	Gen/Load (W)	Load Priority	Gen/Load Threshold (W)
1					
2					
3					
4					

- Port Type - the port type is divided into five categories:
  - Input - in normal state this port is connected to another IPR. Normally the power flow enters to the port.
  - Output - in normal state this port is connected to another IPR. Normally the power flow leaves the port.
  - Generator Connected – a generator is connected directly to the port.
  - Load Connected - a load is connected to the port.
  - Input-Output/Load Connected - in normal state this port has a load connected, but it also can serve as a redundant path on reconfiguration state.

- Line Capacity - power transmission capacity of the line connected to the port.
- Generation/Load - generation capacity or connected load magnitude. Depending on the port type for some cases this information does not apply to the port.
- Load Priority – priority of the load connected at the port. It is assigned priority one to vital loads, priority two to the semi-vital loads, and priority three to the non-vital loads. Depending on the port type for some cases this information does not apply.
- Generation/Load Threshold - load or generation limit to make the ICCU controller react and start an appropriate reconfiguration plan. Depending on the port type for some cases this information does not apply.

3) Measured System Parameters- input that comes from the sensors and switches module. It contains the measured real power data in each IPR port. The controller reads this data depending on the time interval defined in the sensor sampling time.
4) Breakers Status - input that comes from the sensors and switches module. It contains the breaker status connected in each IPR port. The controller reads if the breaker is connected or not-connected (1 or 0). The controller reads this data depending on the time interval defined in the sensor sampling time.

5) IPR Communication Data Input – to this input arrives requests or responses from the connected neighbor IPR's. This input is composed of four interfacing circuits, one for each port. The communication format used by IPR's for the information exchange is a three elements array shown in table 4.2. If some IPR port is connected to a generator or load, the interfacing circuits for the data exchange at this input becomes useless.

TABLE 4.2 Array used for the Communication Exchange between IPR's.

Array Element	Description
Code	A numerical code is used to know if the message is a request, a response or a message that the IPR is transmitting only to serve as a communication link.
Power	Indicates the power that the IPR requires or can offer.
Hop-Count	Indicates how many IPR the request message can passes before the request is denied.

6) Line Protection - this input provides information about the connected lines to the IPR. To simulate a system attack or fault in this first IPR version, the lines of some IPR's are disconnected at different programmed times. The line protection input detects the lines disconnection and subsequently the power loss. This provides knowledge to the controller of the problem localization.

7) IPR Switch - is simply a switch that puts in operation the IPR controller. If the switch is off the system will remain with the initial breakers configuration and no change will occur even if some problem or disturbance occurs.

8) Breakers Control - this controller output contains an array with the new breakers status after the controller has processed the reconfiguration algorithm.

9) IPR Communication Data Output – opposed to its counterpart this port sends requests or responses to the connected neighbor IPR's. It is composed of four interfacing circuits, one for each port. The format used by the IPR's for the communication exchange is the same shown previously in table 4.2. If some IPR port is connected to a generator or load, the interfacing circuits for the data exchange at this input remain unused.

10) IPR Connected Load – this output is used to do a calculation of all the connected loads to an IPR by priority. With all the IPR's connected load data, the total percent of the connected load in the system by priority can be obtained.

11) IPR Controller - the IPR controller collects all input data and introduces it as variables to a reconfiguration algorithm that process it. The algorithm output will be an array with the new breaker status. The controller algorithm implementation and the tool used for it simulation are explained in detail on the next chapter.

All the ICCU system was encapsulated for easy handling inside the electric network. Figure 4.13 shows the ICCU system and the conversion to the encapsulated block. The measured real power and the breaker status inputs can be observed at the left side of the block. Also the controller output containing the new breaker status can be observed at the right side of the block.

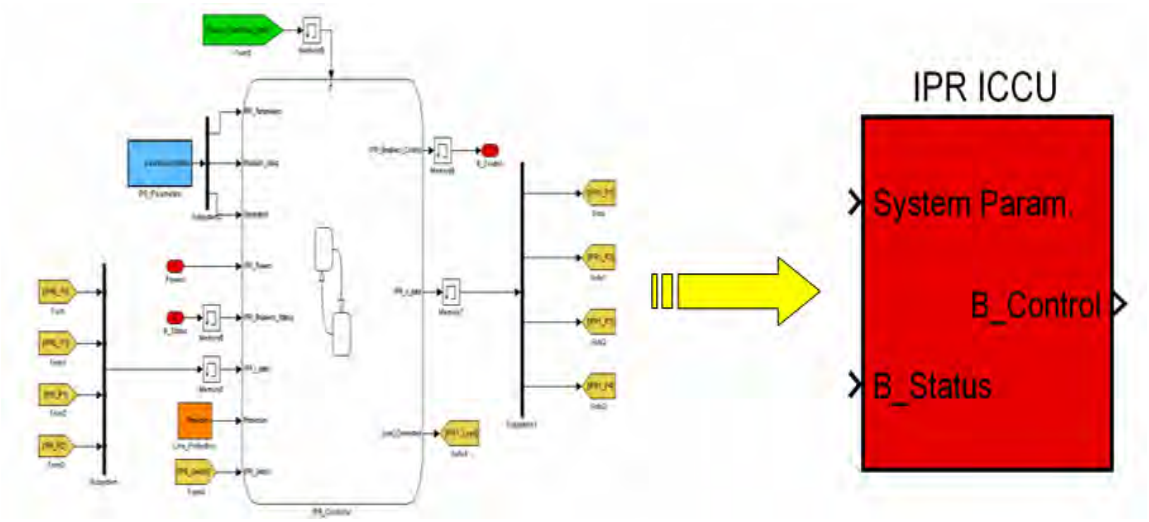

Figure 4.13 ICCU Encapsulated System.

The connection of the ICCU with the sensors and switches module is shown in figure 4.14. The two outputs of the sensors and switches module contain the measured system parameters and the port breakers status. They are connected directly to the ICCU inputs. The ICCU output contains the new breakers control and is connected to the only input of the sensors and switches module.

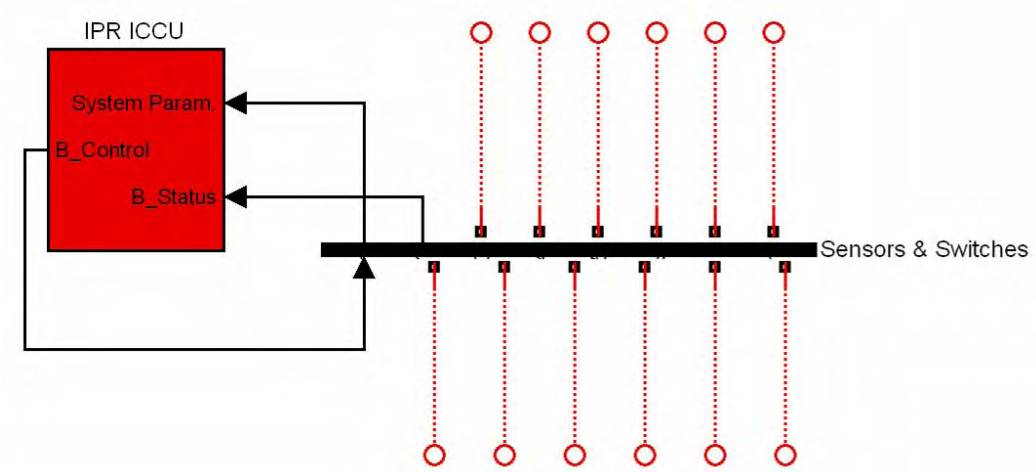

Figure 4.14 ICCU Connected with the Sensors and Switches Module.

5 IPR ICCU DISTRIBUTED ALGORITHM (A FIRST GENERATION)

The IPR reconfiguration algorithm was programmed using a graphic design tool called Stateflow that also works with Simulink. Stateflow is a simulation environment for modeling the logic used in the control and supervision of physical systems modeled in Simulink. Visually model and simulates logical controls, providing complex descriptions of the system behavior, using finite state machines theory, flow charts, and states transition diagrams, in a same window. In Simulink, a Stateflow block uses a state diagram to represent an object with a set of discrete modes. These modes are known as states. A finite state machine in Stateflow reacts to events, changing states for the controlled object. The object behavior depends on which state it is and in how the object changes from one state to another.

A control object can be a motor, a pump, a switch, or any device that change the model behavior by controlling its operation. In the Stateflow diagrams, the control object reactions to physical events originating from sensors and switches are modeled visually. These reactions create decisions that change the Simulink model behavior.

A state can be active or inactive. In Stateflow, it is possible to program some activity to occur when the state becomes active. The directional transitions between states are originated at a source state and finish in a destination state. If the source state

is active and the transition is realized, the source state becomes inactive and the destination state becomes active. The events provide the motivation that the model needs to do the transition between states. An event can represent any sensor warning originated at the Simulink physical model. These events cause reactions in the corresponding Stateflow blocks in the model. In addition to the Stateflow basic construction blocks (states, transition and events); Stateflow provides some decision points called junctions. A junction provides alternate paths for the transitions. Local data variables can be defined to be used only by the Stateflow diagram. Also input and output data variables can be defined and used to send and receive information from the Simulink model.

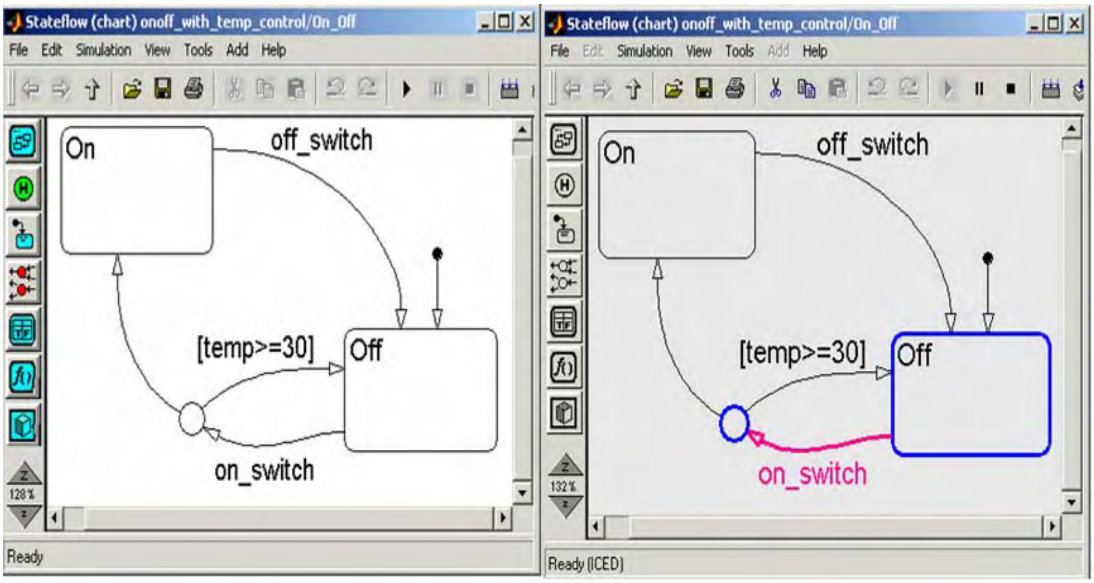

Figure 5.1 StateFlow GUI with Animated Diagram Example.

Figure 5.1 shows an example taken from the Stateflow help file of a basic temperature dependent control switch. The default transition places the switch in the Off state. If the on-switch event occurs and the temperature is not greater or equal to 30º, then the On state becomes active and the Off state becomes inactive. If the on-switch event occurs and the temperature is greater or equal to 30º, the Off state will remain active and the On state will remain inactive. If the On state is active and the off-switch event occurs, the Off state becomes active and the On state inactive. During a model simulation, Stateflow animates the diagrams showing how it responds to events, takes transitions and changes states. In the animated diagram the active states are highlighted, as can be observed in figure 5.1.

The local input and output variables can be used in the Stateflow diagram as function variables. A Stateflow function is an extension for the actions that are been carried out in the states. Once a function is programmed, it can be called the necessary times using the Stateflow action language. Stateflow defines three function types: graphical, truth table, and embedded Matlab. The graphical functions are programs written with flow graphs using connective junctions and transitions. The truth table is programmed using a logical language in form of conditions, decisions, and actions. The embedded Matlab functions are programmed like Matlab normal functions. They are used usually to generate complex codes and in applications in which the operating systems and platforms have strict memory and data type requirements.

5.1 ICCU Finite State Machine

Figure 5.2 shows a simplified view of the proposed finite state machine for the IPR controller. It consists of four super-states: *steady_state*, *contingency_detected*, *attending_request* and *request_broker*. Each IPR has a controller with a finite state machine of this type that operates independently of the others. The Stateflow blocks in the ship power system model are found inside the ICCU as can be observed in figures 4.12 and 4.13.

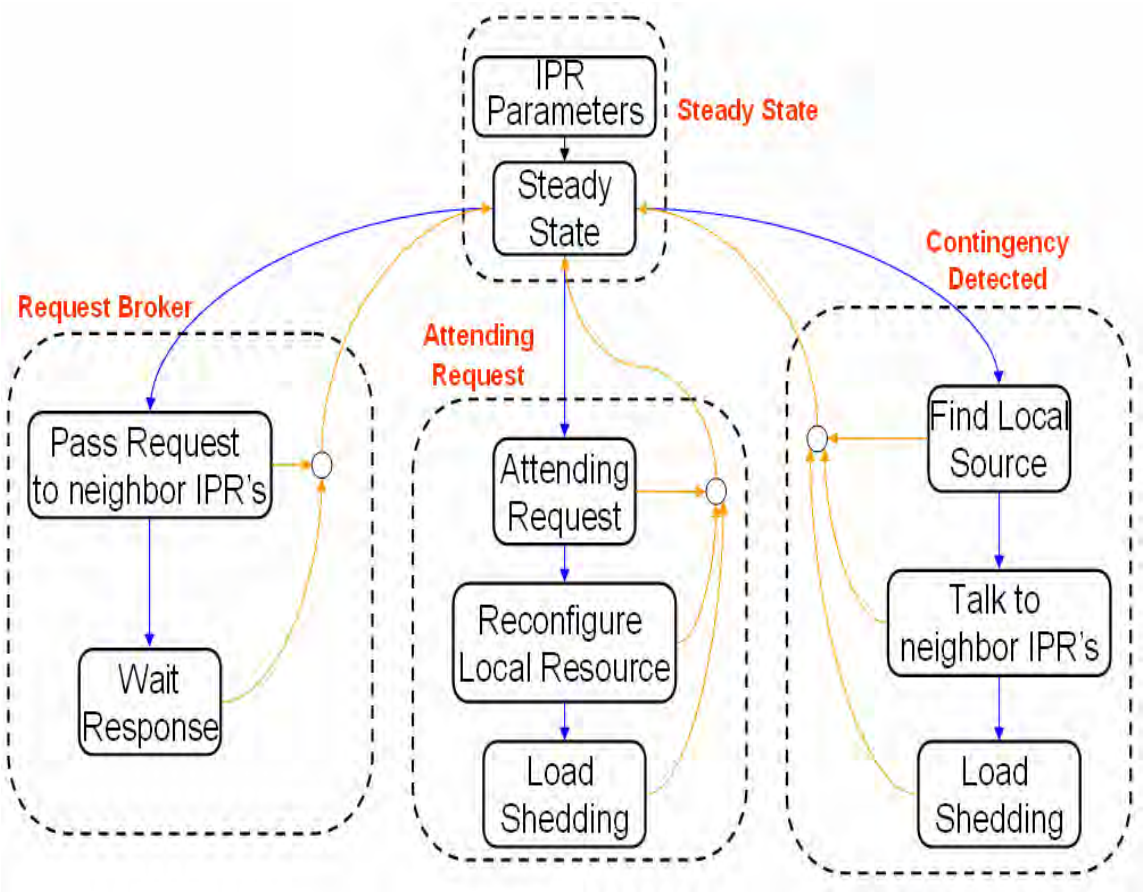

Figure 5.2 IPR Proposed Finite State Machine Controller.

5.1.1 Steady State

The *steady_state* is the default state where the state machines are placed when the simulation begins. It is divided into other two main sub-states: *IPR_parameters* and *steady_state* which are explained subsequently.

- IPR Parameters- in this state the controller reads the majority of the input data variables. The controller acquires detailed knowledge of what the IPR has connected in the ports and their characteristics. Some of the data are generators capacities, loads magnitudes, connected lines capacity, connected neighbor IPR's, loads priorities and loads or generation thresholds to react under a power loss. Automatically after reading the data the state machine move to the *steady_state* super-state.
- Steady_State- in this state the controller is maintained in a constant data reading stage. At each time interval defined by the sensor sampling time, the controller collects the measured real power data from each IPR port and collects the breaker status data sent by the sensors and switches module. At each interval it is verified if the measured real power data is above or under the thresholds defined for loads and generators. If some fluctuation or critical problem is detected in some port, the state machine will pass to the super-state *contingency_detected* to try to solve the problem. If on the other hand, to the controller arrives a power request from a neighbor IPR, it will verify if it has a generation source connected. If it has a generator, the state machine will pass to the super-state *attending_request* to try to

respond positively to the request. If this IPR does not have any available generation source, the state machine will pass to the super-state *request_broker* to transmit the message to all its neighbors IPR's and thus try to respond to the request. This will continue happening in each IPR until a solution is found.

Figure 5.3 shows the similarity between the proposed super-state *steady_state* and the one implemented in Stateflow. In the Stateflow diagram we can observe a lot of more complexity due to the function calls, transitions and variable creations.

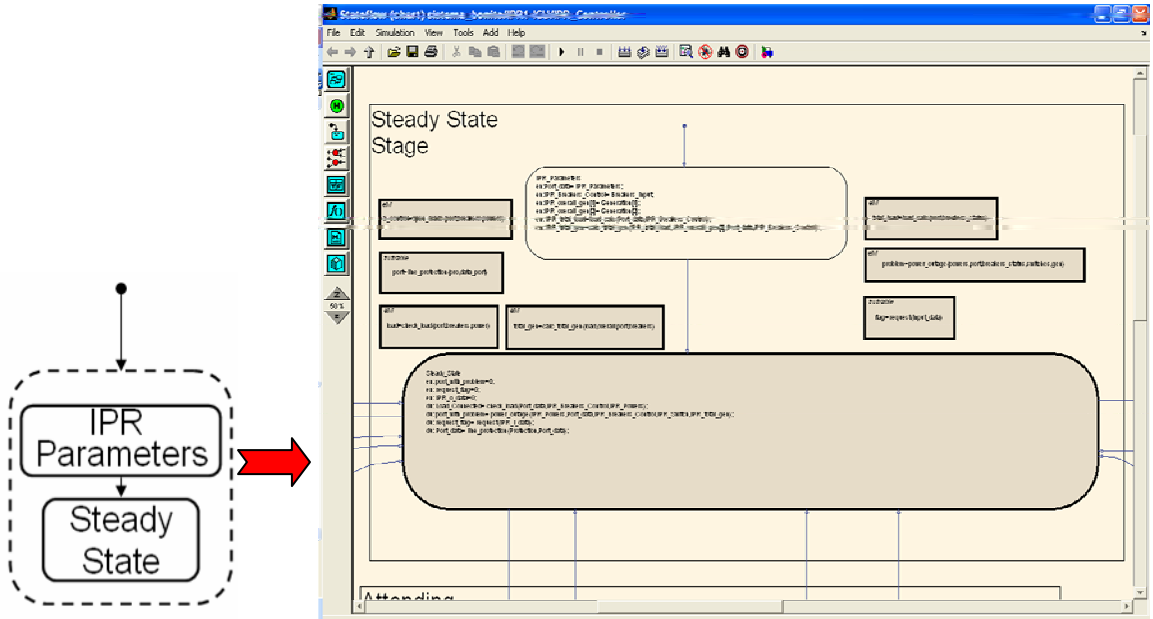

Figure 5.3 IPR Controller Steady State Super-State.

5.1.2 Contingency Detected

The super-state *contingency_detected* activates when some disturbance or fault is detected in one of the IPR ports. It is composed of three main sub-states: *find_local source*, *talk_to_neighbor_IPR's* and *load_shedding*. The objective of this super-state is to find an IPR with a connected local source that can solve the problem or establish communication with neighbor IPR's to send them a power request. The three sub-states are explained subsequently:

- Find Local Source – this state verifies if there is a generator connected directly to one of the affected IPR ports. If there is a generator, then it should verify if it has the capacity to supply the necessary load demand. If it can supply the demand, the generator is connected and the machine returns to the *steady_state* super-state to wait for another event. If it can not supply the demand, the machine passes to the following state to establish communication with neighbor IPR's and send them a power request.
- Talk to neighbor IPR's - using the IPR input parameters; this state verifies which ports are suitable for serving a power request. Observing table 4.1 the suitable ports types are: input, output and input-output/load connected. Besides the port type, it is necessary to know if the line connecting those IPR’s has the capacity to transmit the necessary power flow. As soon as the suitable ports to establish communication are known, a request message is sent to the IPR's, using the format shown in table 4.2. The next step is to wait for the IPR's responses. All the IPR’s

that respond positively will send the power that they can supply. The affected IPR has to verify if this power serves to supply all the affected loads or only to supply the vital loads. If the power is sufficient only for some loads, the state machine will have to pass to the next *load_shedding* state and then to the *steady_state* super-state. If the power that can supply the donor IPR is sufficient for all the loads, then a control signal is sent to the breakers at the sensors and switches module with the new configuration status. Then the state machine will return to the *steady_state* super-state. If on the other hand, all the IPR's answers are negative, the state machine will return to *steady_state* super-state to wait for another event. In the *steady_state* it will stay some time intervals and then it will return to the *contingency_detected* state to try to be reconfigured for a second time.

- Load Shedding - if the power that can supply a neighbor IPR is not sufficient, this state makes an election of which loads supply depending on their priority. The vital loads will be supplied first, then the semi-vital and finally the non-vital loads. The magnitude of each load that is being connected is subtracted from the total power that the neighbor IPR can supply. This will happen until the difference equals zero or the next connected load can not be totally supplied.

Figure 5.4 shows the proposed *contingency_detected* super-state and its implementation in Stateflow. The Stateflow diagram is more complicated due to the transitions and functions used to change states, verify status and perform calculations.

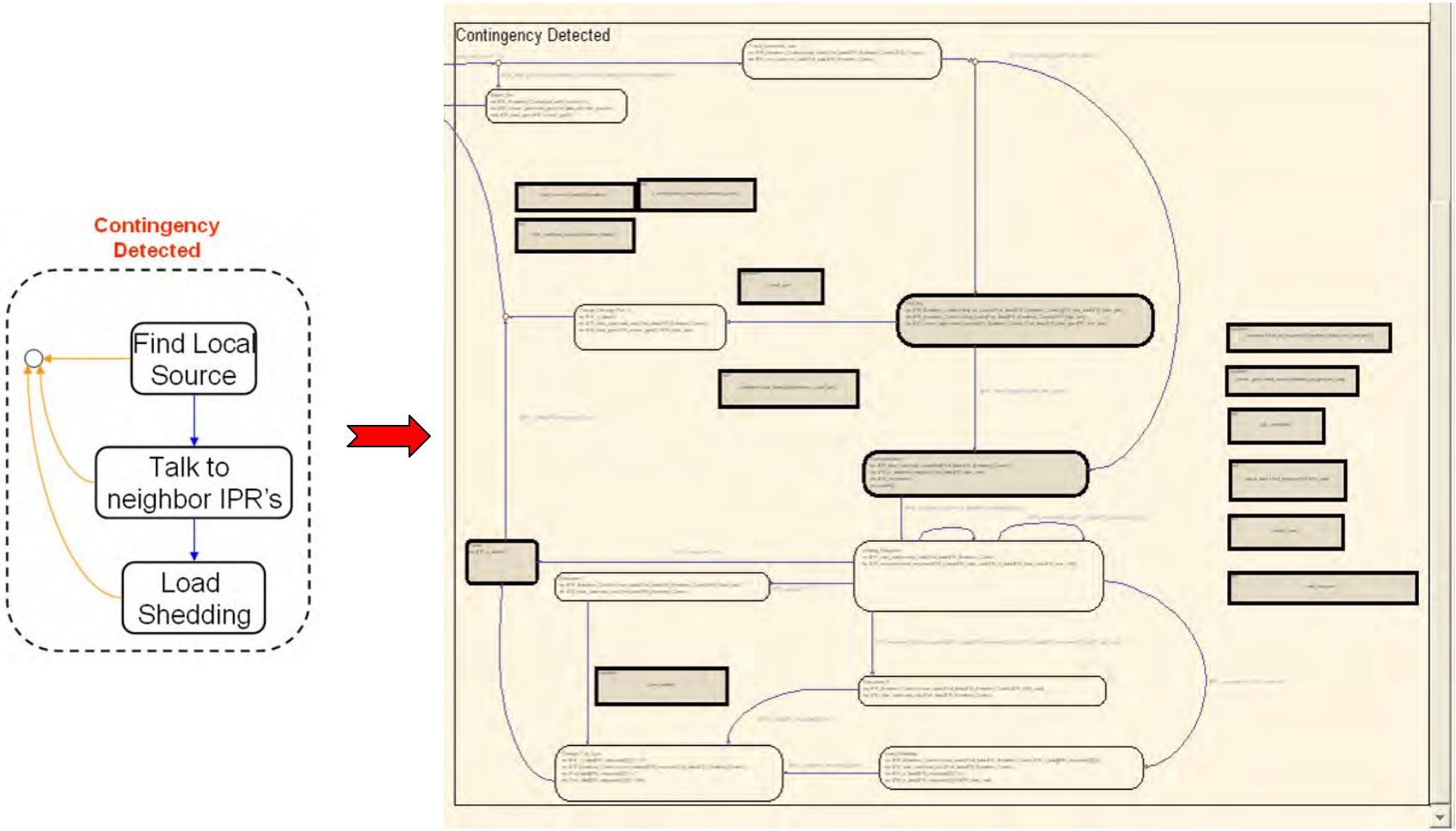

Figure 5.4 IPR Controller Contingency Detected Super-State.

5.1.3 Attending Request

The *attending_request* super-state activates when the IPR receives a power request and it has a generation source connected in one of its ports. The objective is to attend the request and verify if it can supply the required power or at least part of this. It is composed of three sub-states: *attending_request*, *reconfigure_local_resource* and *load_shedding*. These states are explained subsequently:

- Attending Request - this state verifies if there is a generator connected in one of the ports and if it has sufficient capacity to supply all the required power. If it has sufficient capacity a message is sent to the petitioner IPR saying that the entire request will be supplied, so the necessary breakers have to be closed for the power flow transmission. If the generator does not have the capacity to supply neither one of the petitioner IPR loads, a message is sent denying the request, and the state machine returns to the *steady_state* super-state to wait for another event. On the other hand, if the generator can supply part of the demanded request, the state machine will move to the next state *reconfigure_local_resource* to decide how much power can be supplied.
- Reconfigure Local Resource – during this state the ICCU verifies if the generation resources can supply the power petitioned by the requesting IPR. The only way that the IPR can disconnect some load to supply a neighbor IPR is if the loads priorities of the neighbor IPR are greater that the priorities of the loads at the IPR attending the request. If this is the case, the state machine will move to the next state

load_shedding to disconnect the smaller priority loads and in this way be able to supply the petitioner IPR priority loads. If on the other hand, the petitioner IPR loads priorities are smaller that those of the IPR attending the request, it will deny the requested power and the state machine will return to *steady_state*.

- Load Shedding - if the total or part of the required power can be supplied by the IPR attending the request, being the loads in this IPR of smaller priority than the ones requesting power, it should disconnect the necessary loads. This state is in charge of disconnecting the smaller priority loads, until the petitioner IPR priority loads are supplied.

Figure 5.5 shows the proposed *attending_request* super-state and the Stateflow implementation. The *attending_request* and *contingency_detected* super-states are responsible for reconfiguring the system because they are the ones in charge of connecting or shedding loads and in charge of turning on or off the generators.

5.1.4 Request Broker

The *request_broker* super-state is used to transmit a request message from one IPR to another, since the IPR that is acting as intermediary does not have generation sources directly connected. This super-state has the basic objective to serve as an agent

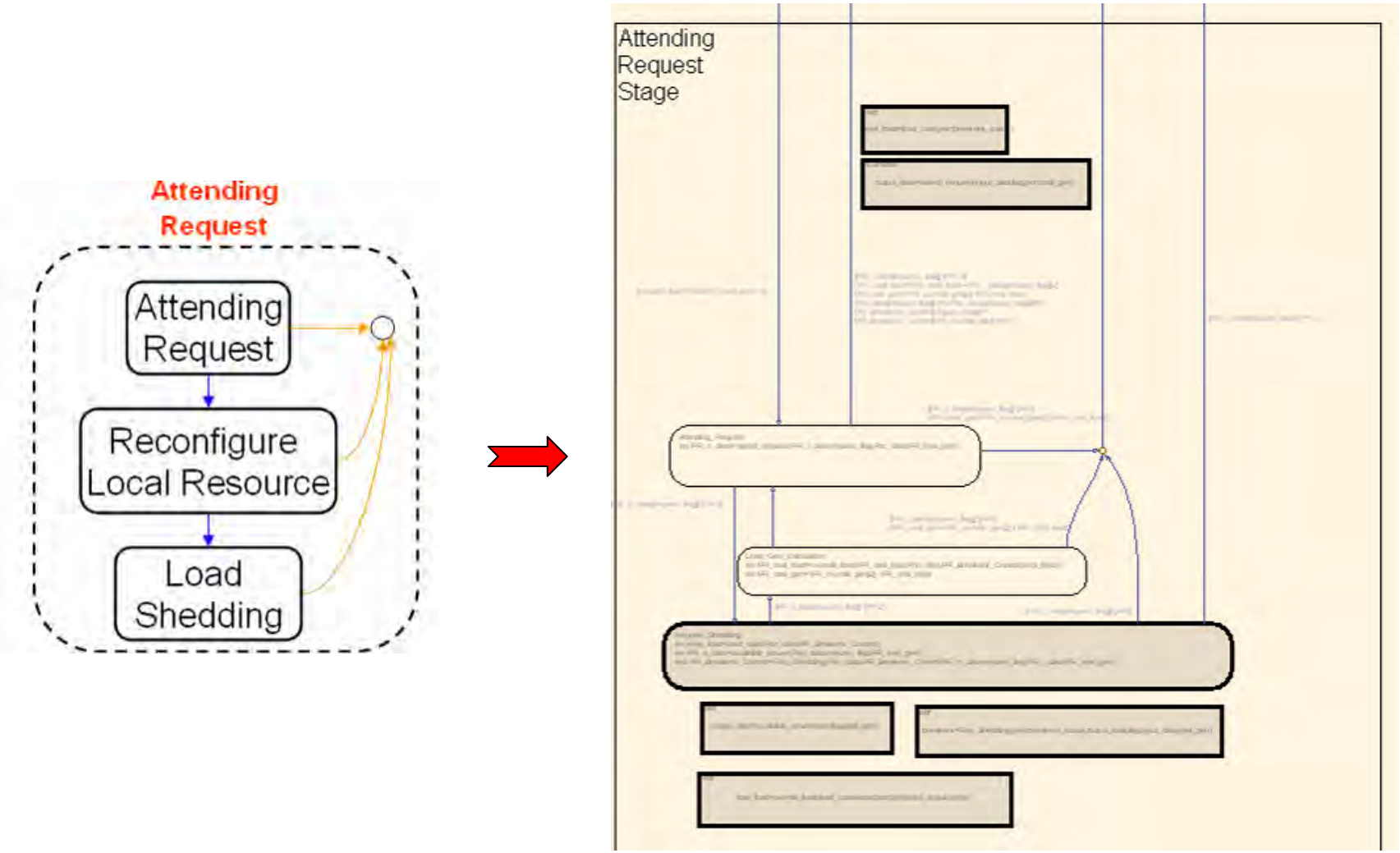

Figure 5.5 IPR Controller Attending Request Super-State.

to exchange information of two IPR's not directly connected. It is composed of two sub-states: *pass_request_to_neighbor_IPR's* and *wait_response*.

- Pass Request to Neighbor IPR's - this state activates when the IPR receives a power request and does not have generation sources connected directly. The job of the state is to transmit the request message to all the ports that comply with compatible requirements of port type and line capacity.
- Wait Response - this state activates after the request message is transmitted through all the corresponding ports. The state has the objective of transmitting the IPR's responses to the IPR that asks for power. If some IPR response is positive, the broker IPR transmits the response and closes the necessary breakers to achieve the power flow, then the state machine returns to *steady_state*. If all the IPR's responses are negative, the state machine returns to *steady_state* to wait for another event.

Figure 5.6 shows the proposed *request_broker* super-state and its Stateflow implementation. It is the super-state with the simplest implementation, yet its complexity can be visualized. With this super-state already developed, we complete the IPR controller state machine, shown in figure 5.7.

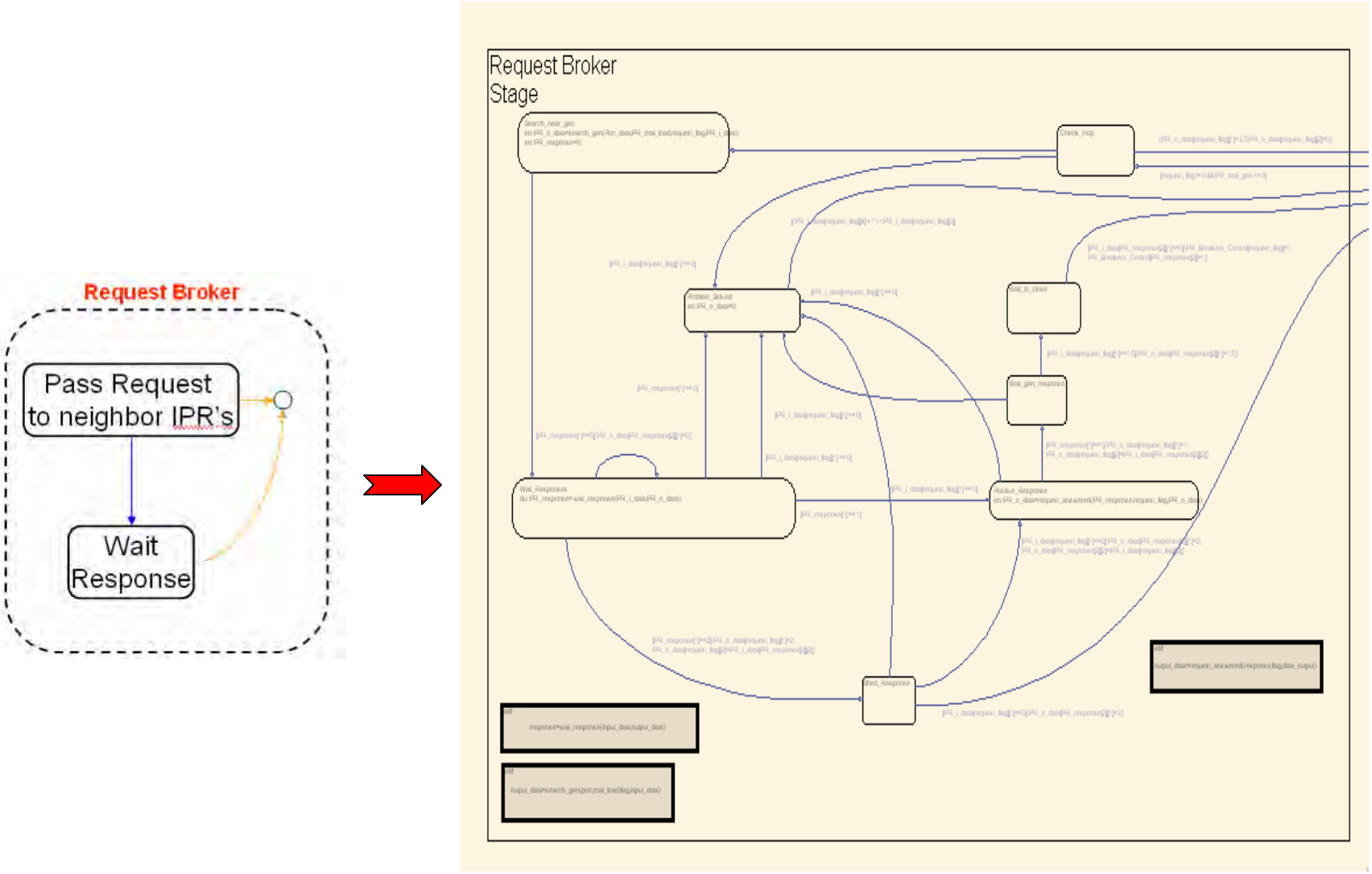

Figure 5.6 IPR Controller Request Broker Super-State.

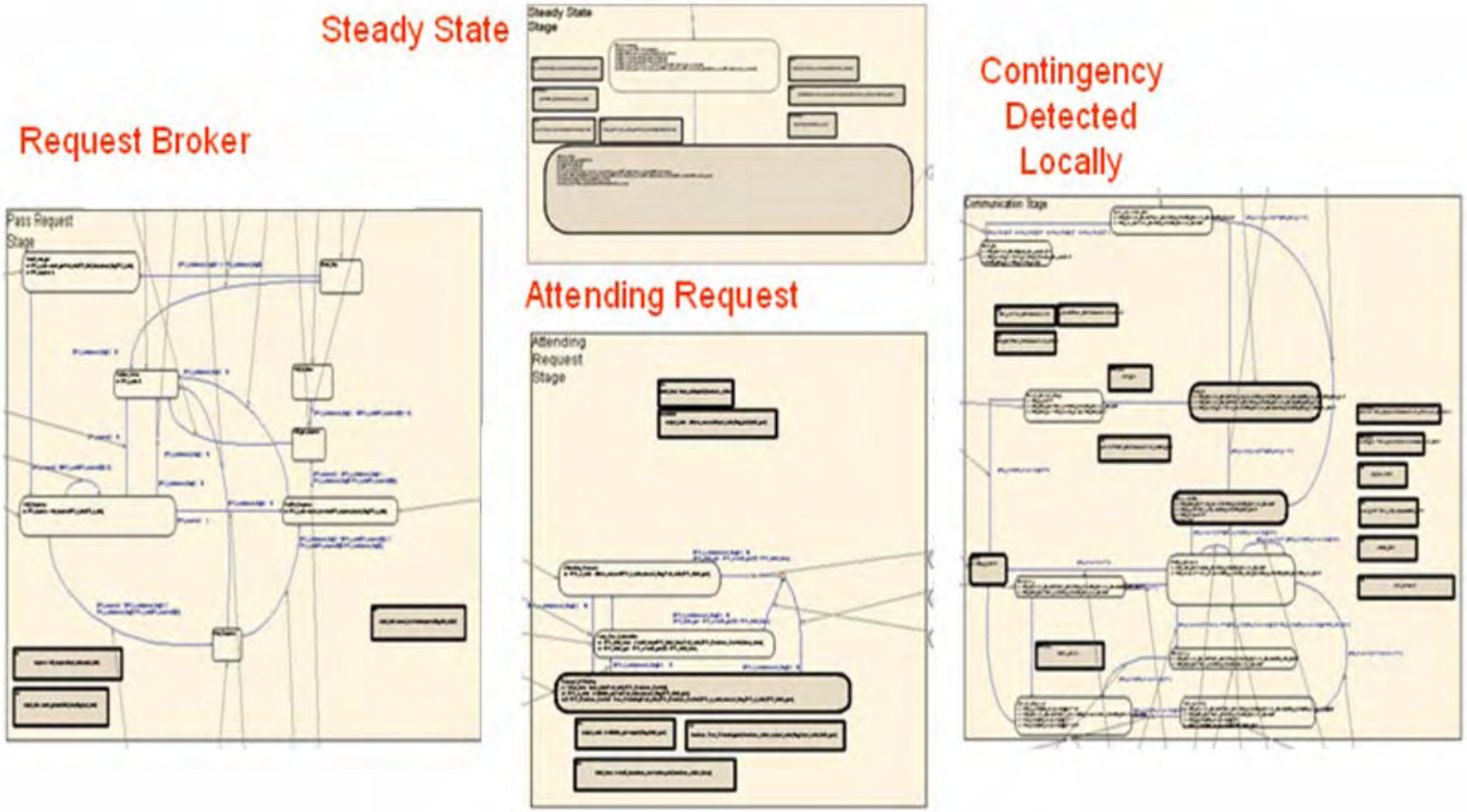

Figure 5.7 IPR Controller State Machine Implemented in StateFlow.

5.2 IPR Controller Application

The example system shown in figure 5.8 consists of three IPR's, six loads and a generator (green block). If a fault occurs in the line that connects IPR's 2 and 3, the two loads at IPR 3 will loss their power since the protection system is going to disconnect them. IPR 3 detects the problem and the controller state machine will move the machine to the *contingency_detected* super-state. Because this IPR does not have a generation source connected directly, it will have to establish communication with its neighbor IPR's to request some power. The IPR 2 that is the only adjacent neighbor receives the power request, but it neither has generation sources connected, so the controller moves to the *request_broker* super-state to transmit the request message of IPR 3 to its neighbors. The only IPR 2 adjacent neighbor is IPR 1. When IPR 1 receives the message sent originally by IPR 3, the controller moves to the *attending_request* super-state because this IPR has a generator connected. In figure 5.8 the active super-state at each IPR controller state machine is highlighted in red.

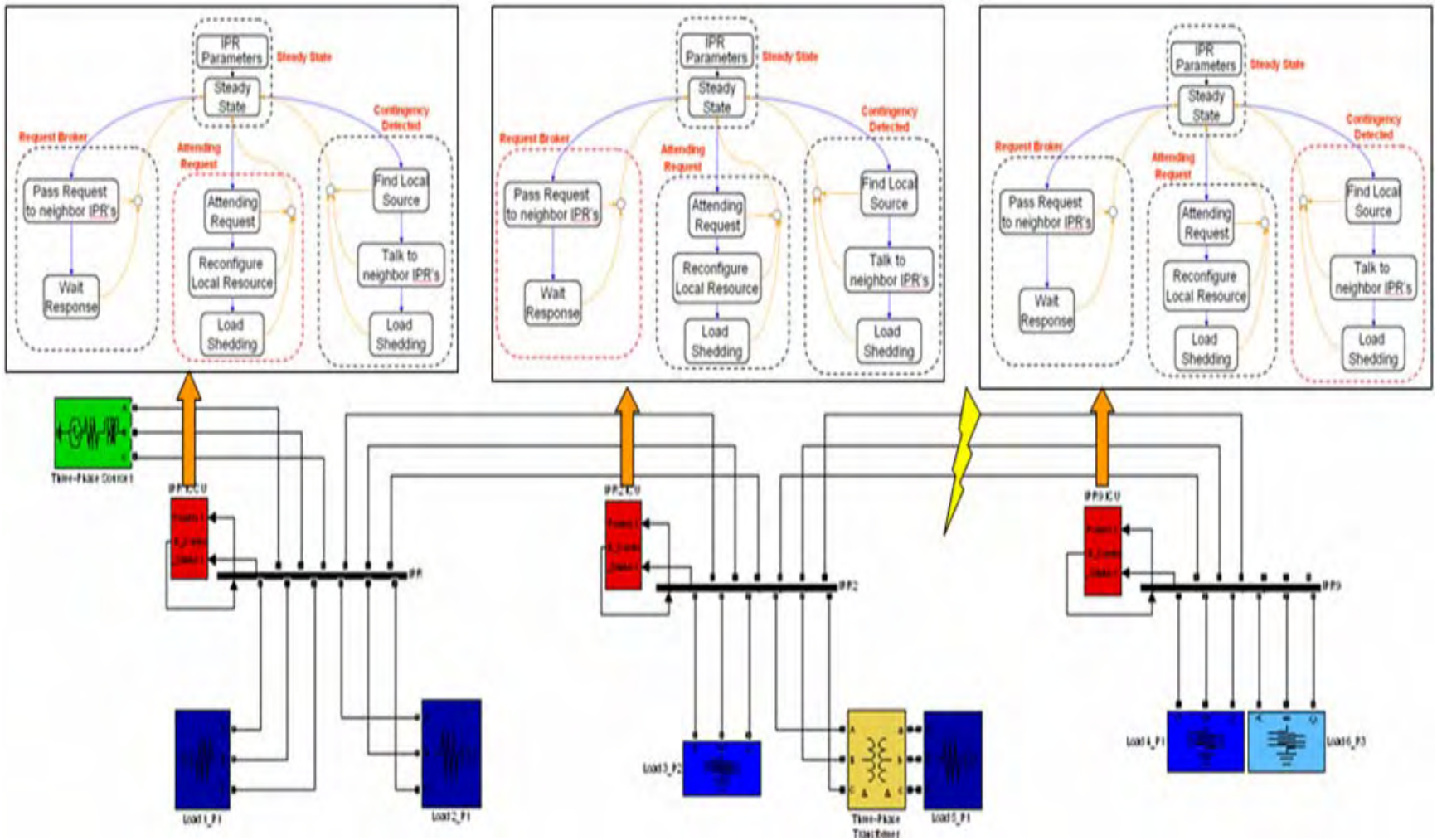

Figure 5.8 Three IPR's, Six Loads, One Generator Example.

6 IPR-BASED ALL-ELECTRIC SHIP FRAMEWORK

The platform used to integrate the IPR's to an electric network and verify its functionality is based on an integrated power system architecture for future naval ships. The model for the original power system was developed by the Center for Electromechanics (CEM) at the University of Texas with the purpose of simulating real operational scenarios, and evaluates the performance of the shipboard power system performance during different conditions [17].

The motivation for an all-electric ship framework came from the introduction of electric propulsion and high pulse power loads. Both introduced a drastic increase on the electric power level from a few mega-watts to some dozens of mega-watts. The power system under consideration reflects the notional DD power system architecture and is developed on the Matlab/Simulink environment. The model facilitates the analysis of reconfiguration settings, energy storage and power quality problems. Also permits the introduction of new technologies into the system components such as generators and propulsion motors in order to achieve the required power density level.

6.1 Electric Ship Power System Model

Figure 6.1 shows a global schematic of the power system developed by the CEM. The prime movers consist of four gas-turbine generator sets. Two main generators producing 36 MW and two auxiliary producing 4 MW for a total of 80 MW of electric power. The main generation voltage and frequency are 13.8 kV and 60 Hz respectively. The three-phase propulsion transformers (13.8kV/4.16kV) are connected to an uncontrolled rectifier that supplies a PWM inverter that controls the propulsion motors, located one on the ship port and the other on the starboard.

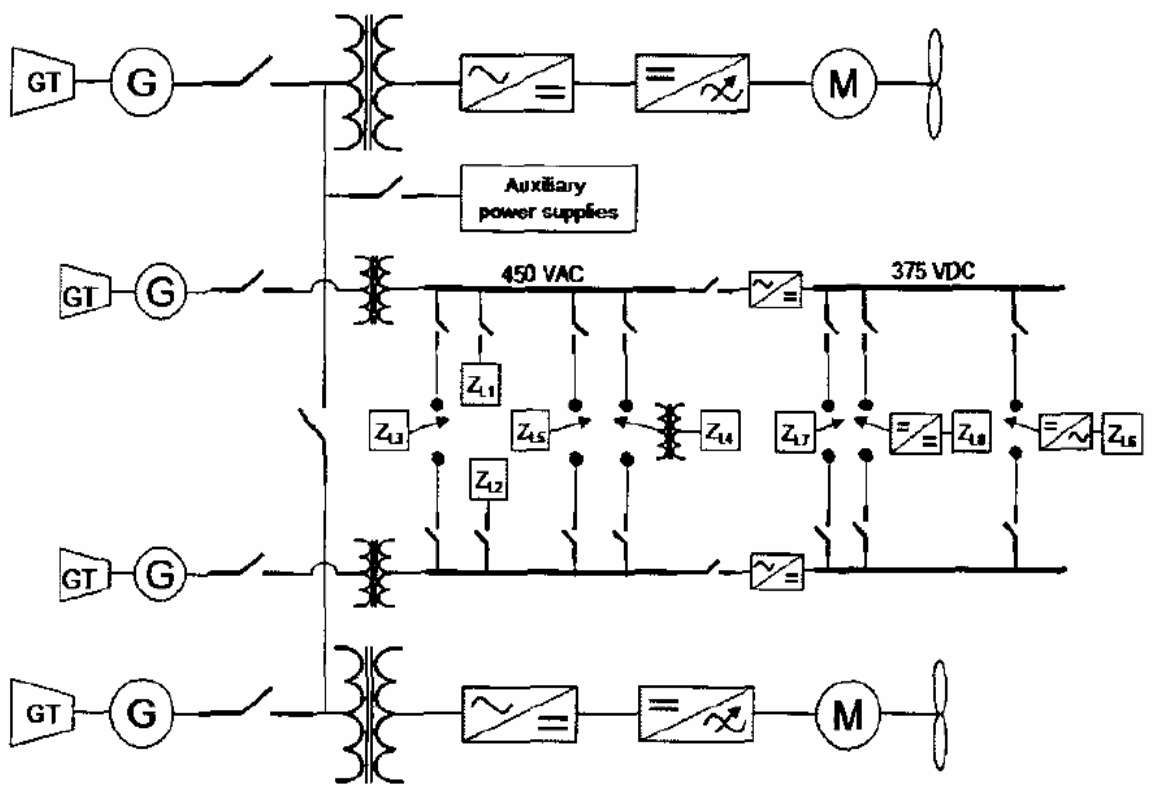

Figure 6.1 Shipboard Power System Schematic Developed by the CEM.

The auxiliary generators are presented in figure 6.1 supplying the service loads enumerated from 1 to 8. Since the system is integrated any generator will be able to supply any load including propulsion loads, service loads or auxiliary loads. The service zones include AC and DC loads. For this reason, there are two load center transformers, two AC buses, two DC buses, a ship service transformer and several power electronics devices that convert energy from AC to DC and vice-versa.

Power electronics blocks and other components such as electric machines and transformers were taken from the SimPowerSystems blockset model library of Matlab/Simulink. Figure 6.2 shows the top-level Matlab/Simulink power system model developed by the CEM. All the components and their parameters are based on published data related to the projected power system for future DD(X) ships.

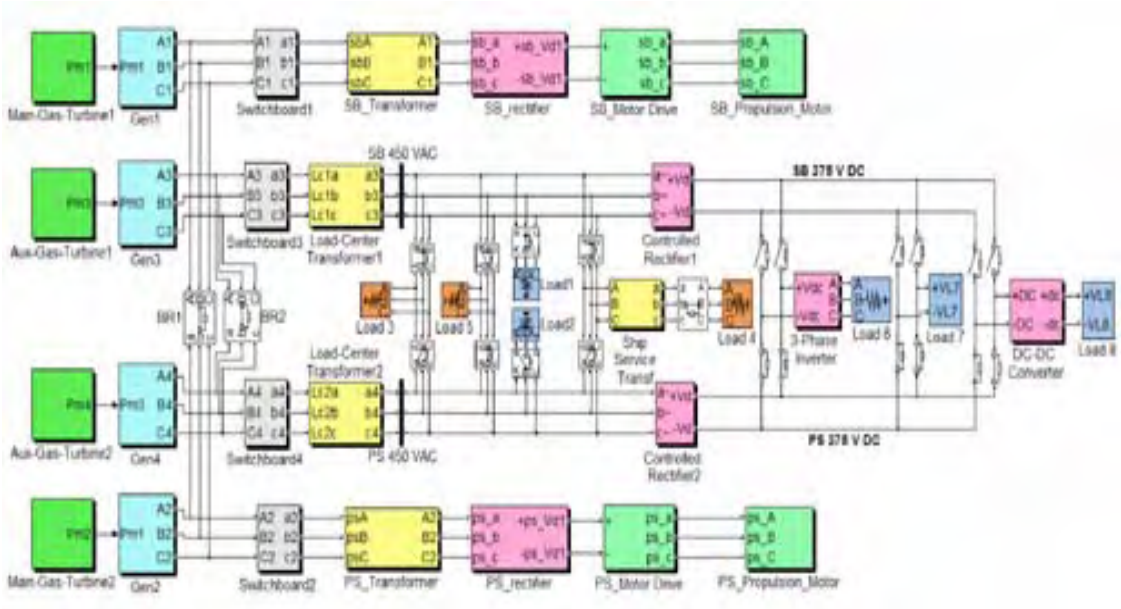

Figure 6.2 Top Level Matlab/Simulink Power System Model.

The power flow from generators to the loads is controlled by means of breakers connected before each load and between the generator outputs. In figure 6.2 the vital loads in orange color connected to the 450V AC zone, have a breaker on the ship's starboard bus and other on the port bus. The loads can be supplied through any one of the buses, keeping the bus not used as a power redundant path in case of an emergency. The loads in blue color connected to the 450V AC zone are non-vital loads that only have a single path to be supplied. In case of a fault, disturbance or attack tnon-vital loads would have to be disconnected to give priority to the vital loads. The blue loads connected to the model DC zone are vital loads that can take power from any of the DC buses located at the ship port and starboard.

This model is quite useful for the analysis of dynamic effects caused by the connection and disconnection of loads and generators on different ship zones. Also it is very useful for the study of power quality problems, testing of a diversity of devices to improve those problems, introduce the distributed generation concept and to exploit the concept of interest in this work, the system reconfiguration capacity. The breakers used in the model do not have any type of intelligence to make them automatically act and isolate an affected ship zone. Neither of the breakers has an automation mechanism to make it communicate and achieve a reconfiguration topology to supply vital loads that have been affected by some type of fault or disturbance. For this reason we introduce the

IPR, to achieve a secure and reliable system that can re-establish critical loads such as propulsion, communication and weapons systems in the smaller amount of time possible.

6.2 Power System Model with IPR's

We modified the original power system model developed by the CEM was to distribute IPR's across the electric network. The advantage of having four controlled ports to decide how will power flow, allows the division of the ship into electric zones. An electric zone is defined by an IPR connected at the ship starboard and another IPR connected at the ship's port. These two IPR's in one zone will supply and have complete control of the zone loads. Also they will transmit the power between adjacent electrical zones controlling the transmission lines connected to the IPR.

Figure 6.3 shows a ship electric zone. This zone contains two IPR's, a vital load and two non-vital loads. As can be observed the vital load connected to the transformer, has a redundant path, contrary to the non-vital load that doesn't have redundant paths. The dotted red lines indicate a connection to another IPR, generator, load or simply a port without use. In summary, the IPR's in this zone can connect or disconnect any line, load or generator connected to the ports. There is a continuous communication between these two IPR's and the other adjacent IPR's not shown, allowing the gradual development of a

communication network by expansion. Figure 6.4 show the AC shipboard load service zones modified to include IPR's.

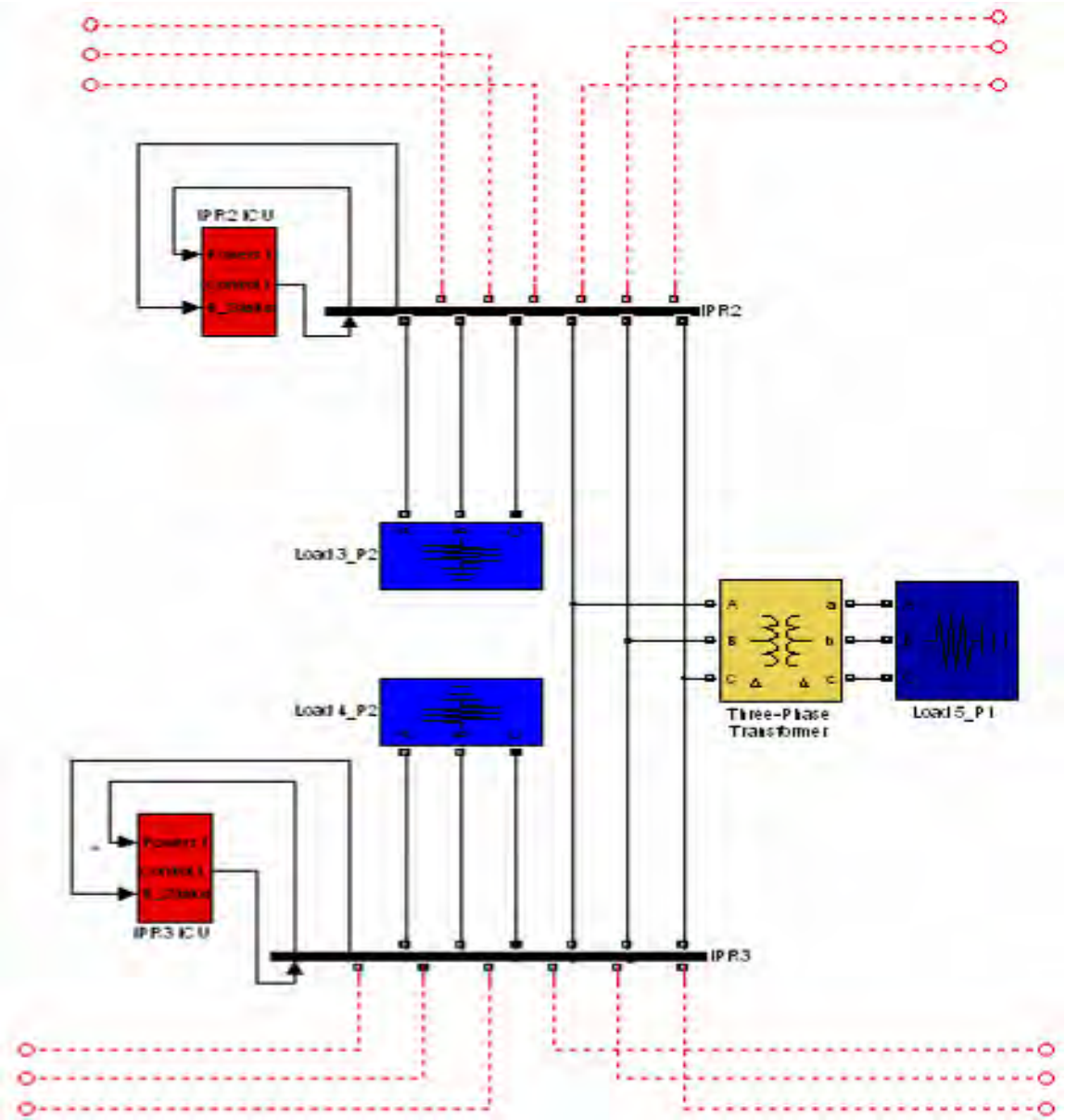

Figure 6.3 Shipboard Electric Zone.

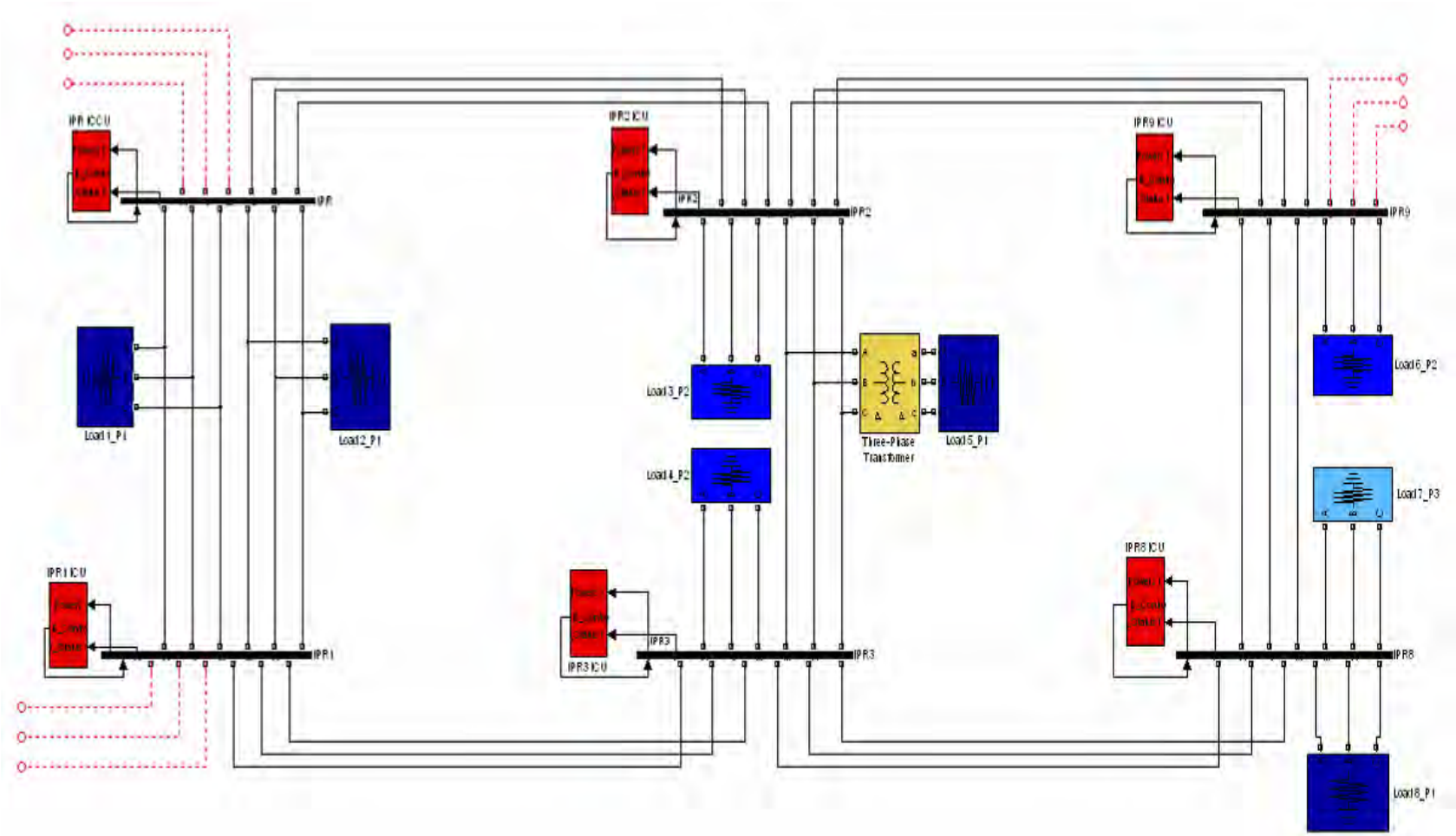

Figure 6.4 Shipboard AC Load Center with IPR's.

The three service zones in figure 6.4 contain a total of eight loads. These are sub-divided in: four vital loads (dark blue), three semi-vital loads (blue) and a non-vital load (light blue). With this simple system configuration achieved using the IPR's, different paths can be opened or closed to obtain new system topologies in case of a fault, a disturbance or an attack. Thanks to the IPR’s, the protection and monitoring system linked to the ICCU permits to have control of the power flowing through each port toward the loads, the power flowing through the transmission lines between IPR's and of the power being supplied by the generators.

Figure 6.5 shows the zones that contain the generators and the propulsion system. Similar to the original system developed by CEM, this modified system has four generators (green blocks), two main with a capacity of 36 MW and two auxiliary of 4 MW, for a total of 80 MW. In normal state the main generators supply the propulsion system while the auxiliary generators supply the load service zones. In an emergency state, the IPR’s are capable of using any of the four generators to supply any service or propulsion load since the priority is to first supply the critical systems inside the ship. The propulsion system composed of two propulsion motors (blue circles), connected to a transformer (13.8kV/4.16kV) can be visualized in the figure, one located at the starboard side and another at the port side. Two transformers (13.8kV/450V) connected directly to the auxiliary generators are responsible for supplying all the loads in the service zone during normal operational state.

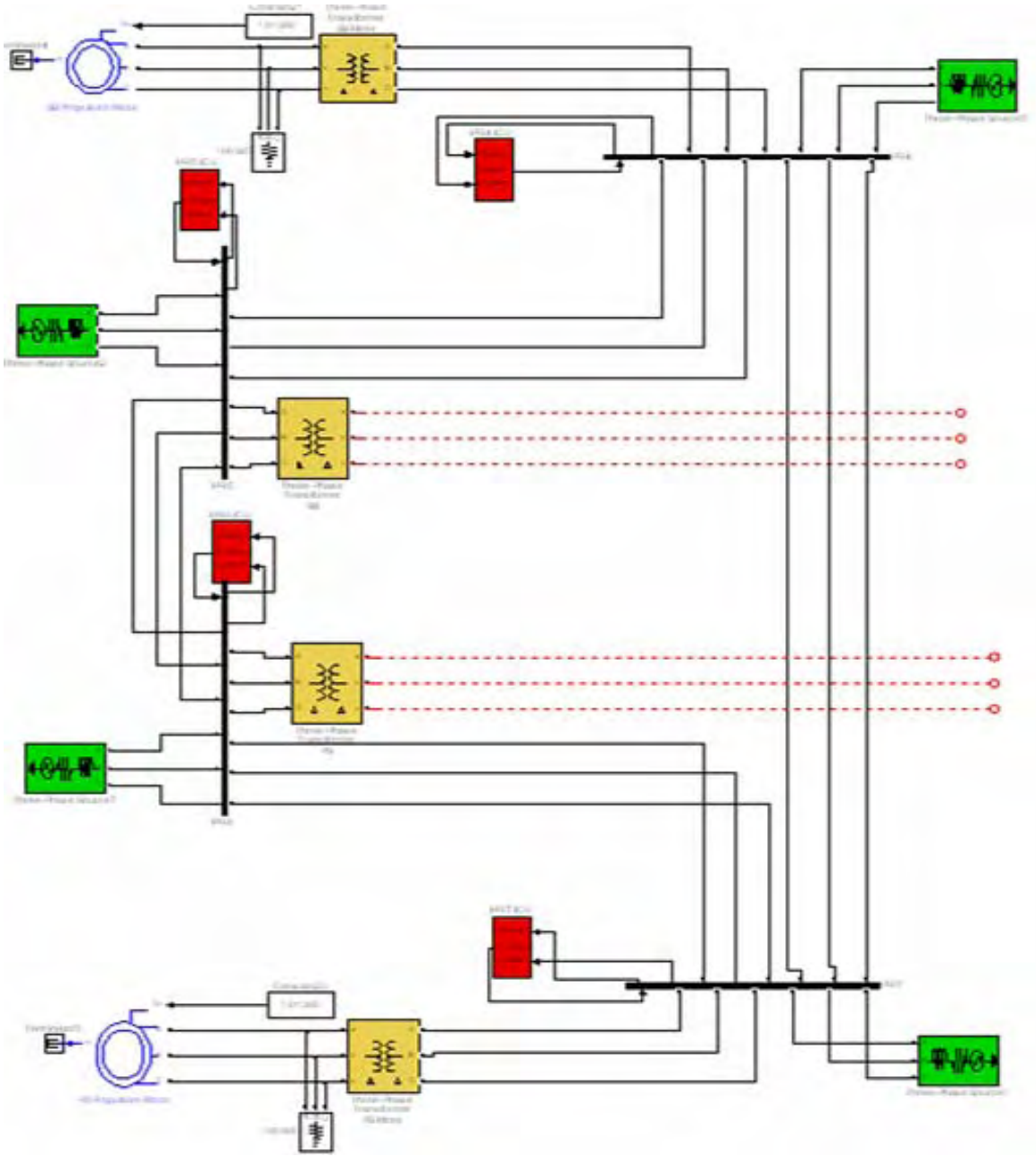

Figure 6.5 Shipboard AC Generators Zones.

The connection between the generator zone and the service load zone can be appreciated in figure 6.6. The two main IPR components, the sensors and switches modules and the ICCU, are marked by two arrows on the figure. The complete schematic of the model used in the experiments is shown on figure 6.7. In this figure the main electric components of the system are pointed out. The generator located on the right side of the schematic is used only in emergency cases when excess of load exist or the zones on the right side remain isolated after an attack.

The developed power system architecture permits the addition of IPR's to connect more generators or loads zone. Introducing the IPR as a new modular device with embedded intelligence, we change the conventional design procedures of an electric power network. In summary, we obtain a new completely autonomous and intelligent network, with reconfiguration capacity under many situations, in a small response time and without human intervention. Figure 6.8 shows how the IPR's divide the system into five zones inside the ship.

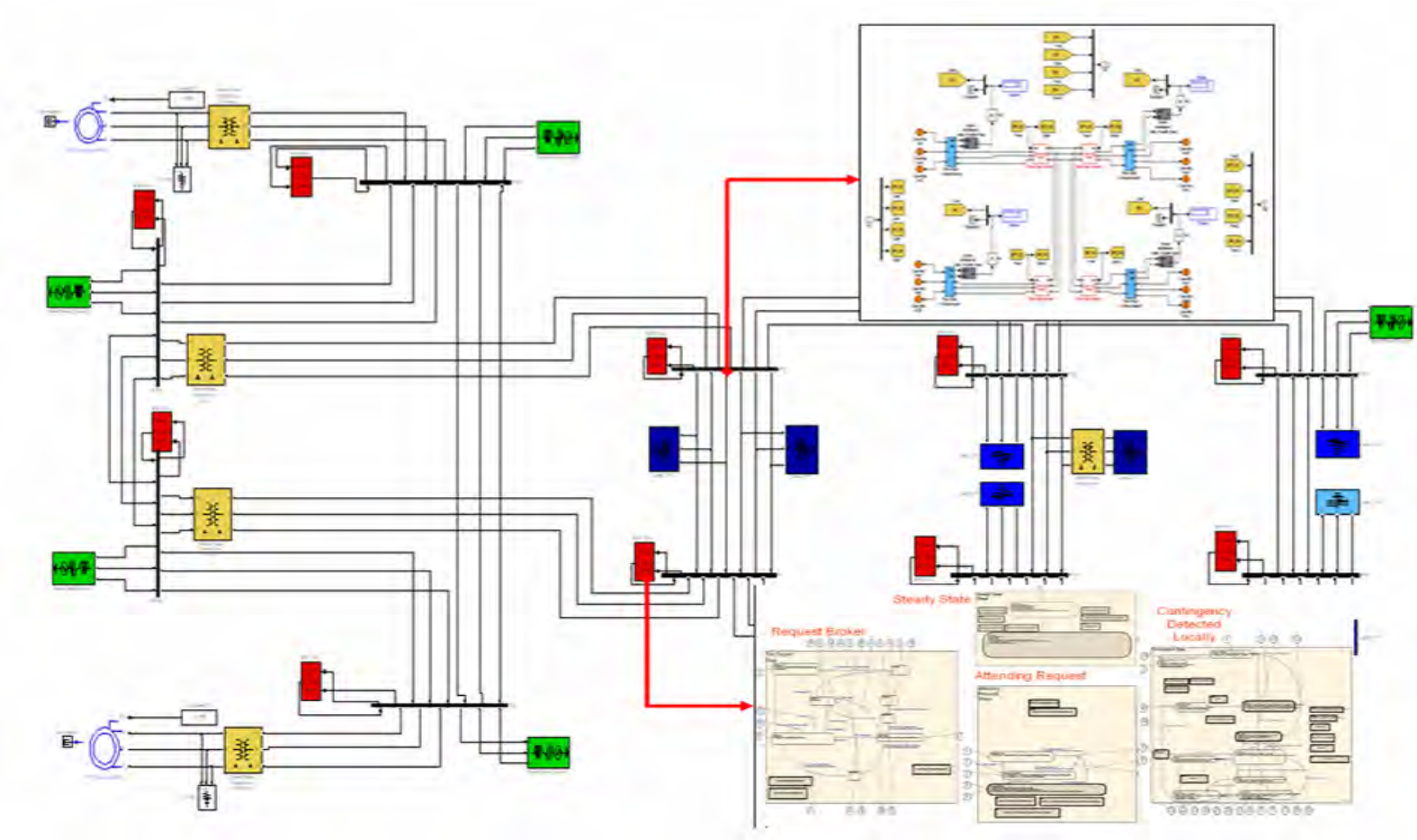

Figure 6.6 Shipboard Complete Power System with IPR's.

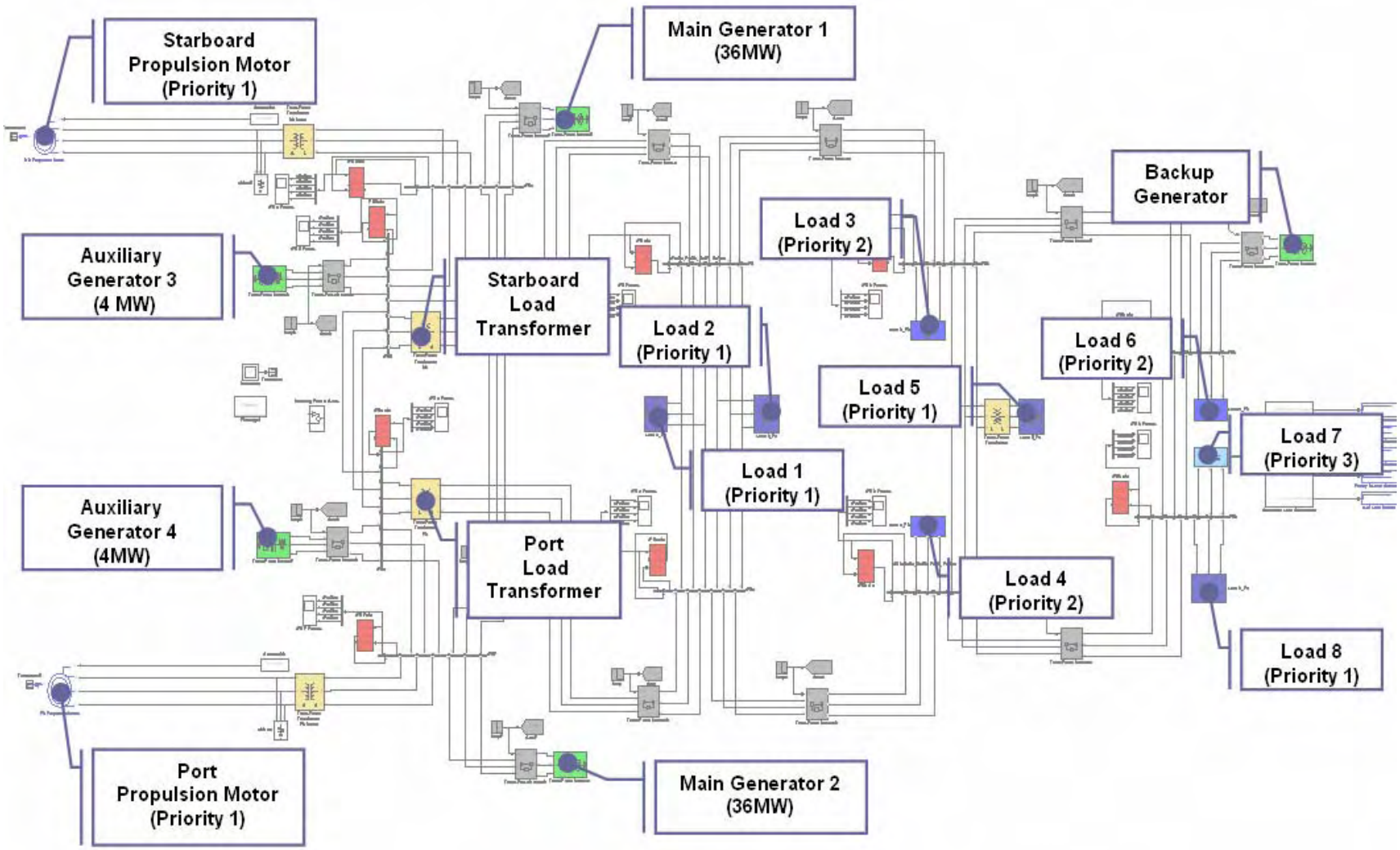

Figure 6.7 Shipboard Power System Electric Components.

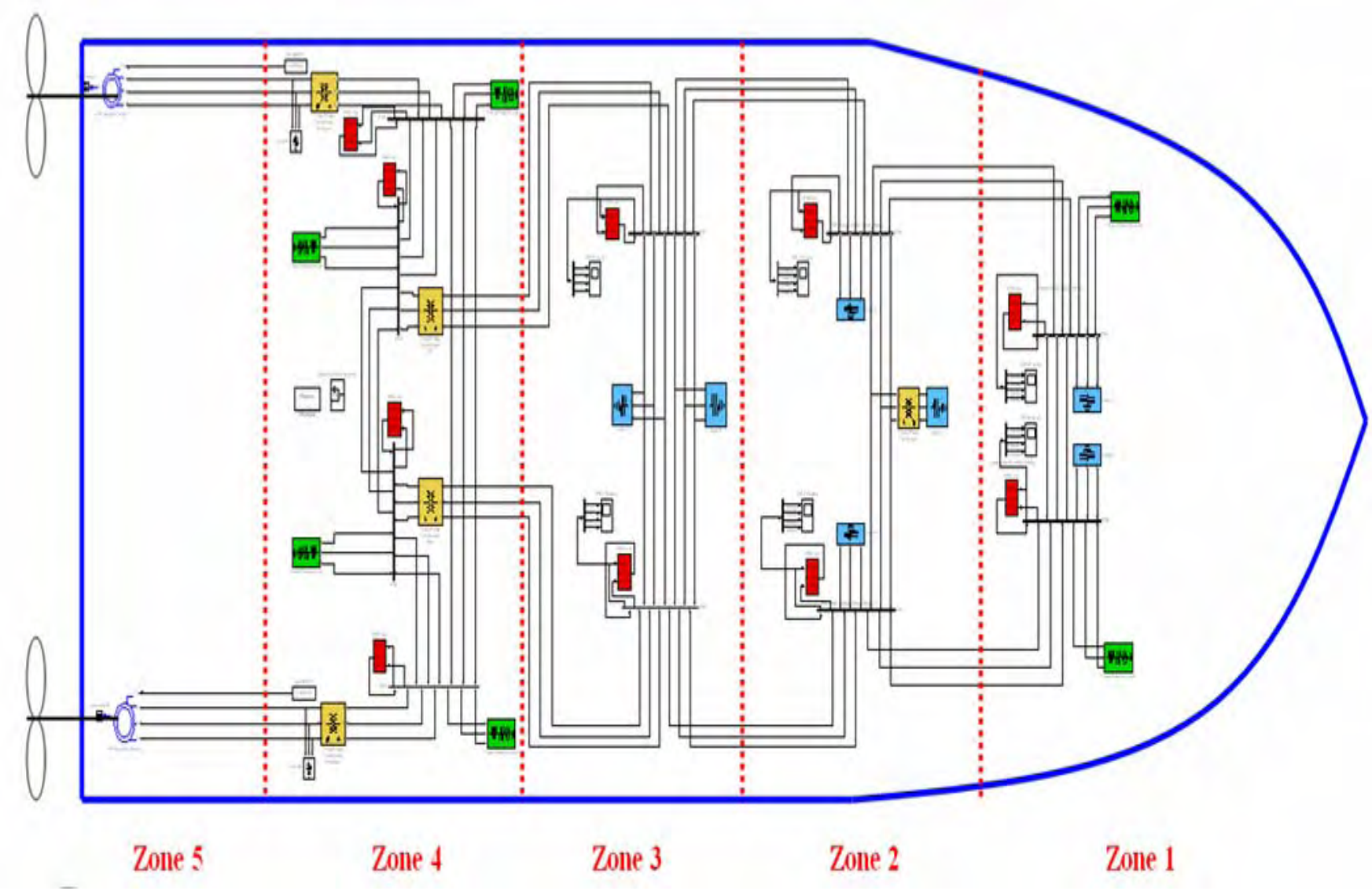

Figure 6.8 Power System Divided in Five Electric Zones.

7 EXPERIMENTAL RESULTS

The experimental results were carried out creating various contingencies scenarios in which the ship's power system suffers power losses in loads or generators of different zones. Because the only system parameter measured in this first version is the real power, we simulate an attack or some system internal fault disconnecting the lines between IPR's. Figure 7.1 shows the power system schematic used for the experiments with some switches connected in the transmission lines between IPR's and in the lines connecting the generators with the IPR's. These switches are closed in normal state but some of them are programmed to open at defined time intervals and in this way simulate the attack or fault. When the switches are opened some loads will loss power and the ICCU of the corresponding IPR will react to make a corrective action.

In normal operational state, power flows to the loads as shown in Figure 7.2. As it can be observed the main generators supply the two propulsion systems (yellow and orange arrows), while the two auxiliary generators supply the load service zones (blue and green arrows). The IPR's are designed in such manner that any generator can supply any load in the system if it has the sufficient generation capacity. The majority of the service loads consume 20 kW at 450 VAC, while the motors consume 373 kW at 4160 VAC. Load number five consumes 1440 W and works at 120 VAC. The main and auxiliary generators capacities were changed for each one of the experiments. Figure 6.7 shows in detail all the system components mentioned before.

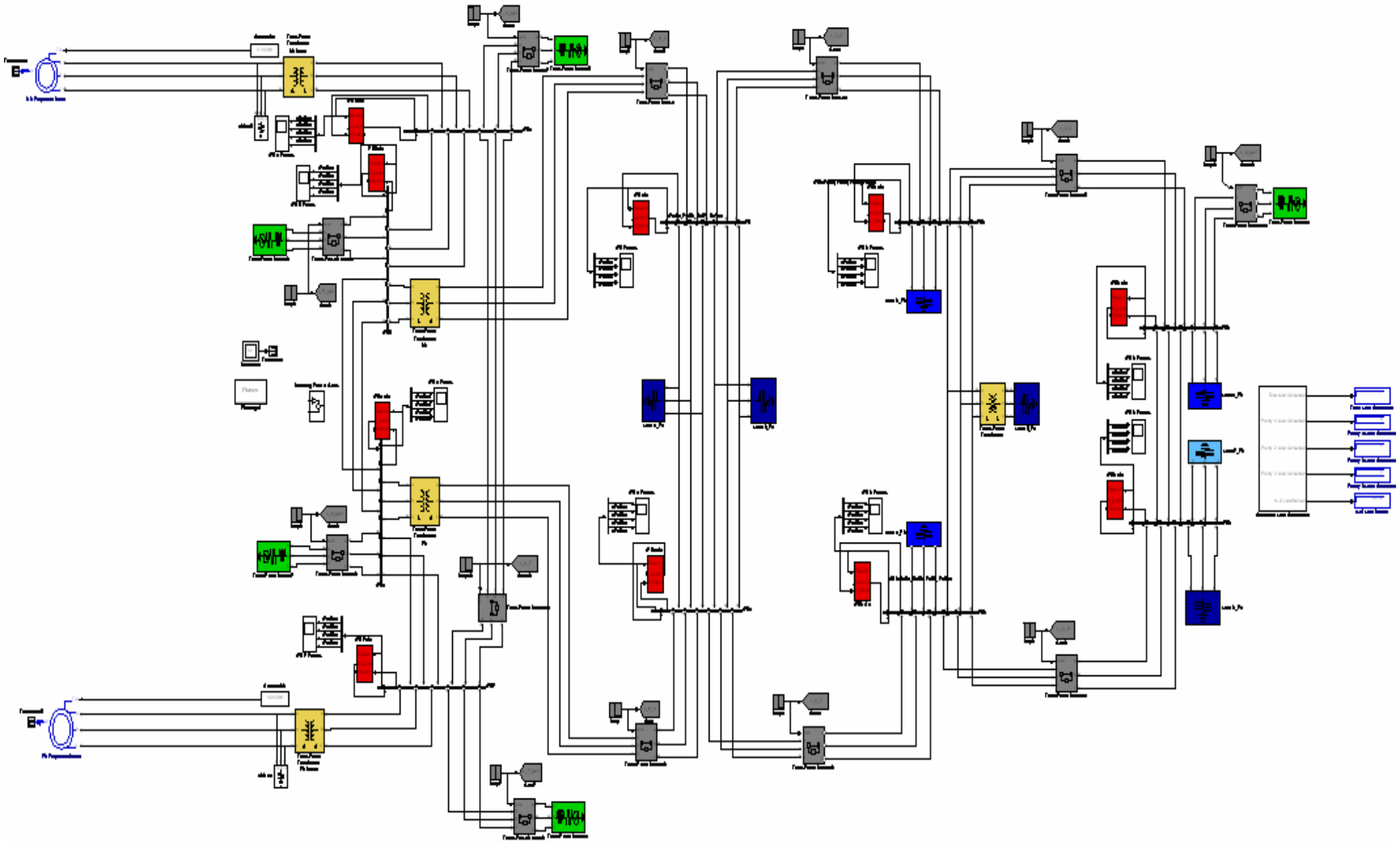

Figure 7.1 Power System Schematic Used for the Experiments.

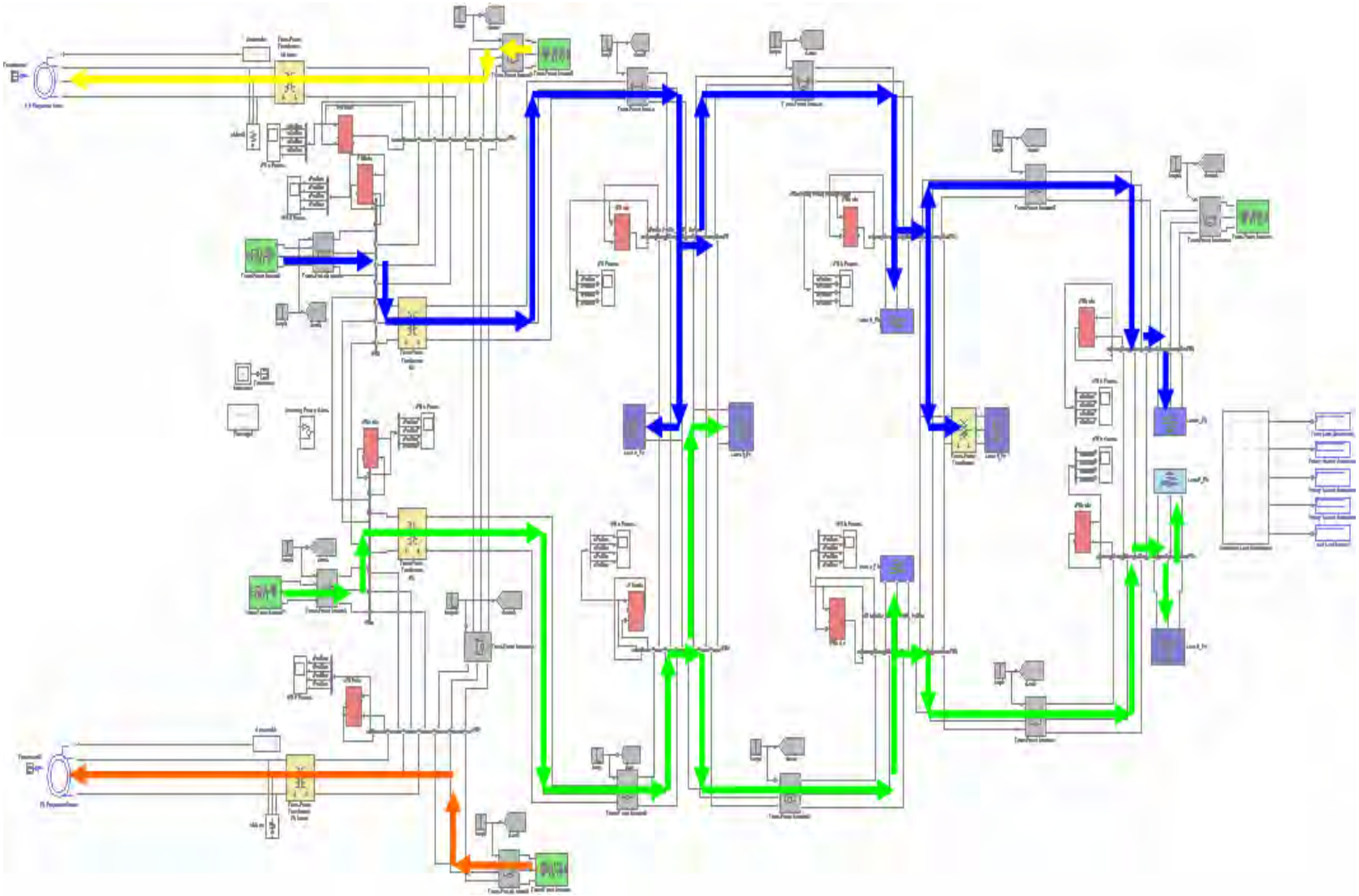

Figure 7.2 Shipboard Power System Normal Power Flows.

The SimPowerSystems simulation tool used to build the shipboard power system provides three integration methods to solve the systems. The methods are the following:

- Continuous solution method using Simulink variable-step solvers.
- Discretization for solution at fixed time steps.
- Phasor solution method using Simulink variable-step solvers.

For small size systems the continuous method is generally more precise. The variable-step algorithms are faster than the fixed-step ones because the number of necessary steps needed to obtain the same accuracy is smaller. The disadvantage is that for large systems containing a great number of non-linear blocks, the accuracy of the continuous method makes the simulation extremely slow.

In the discrete method, the simulation precision will be controlled by the time step chosen for the discretization. The only way to know if the chosen time is acceptable is repeating the simulation with different discrete values or comparing with the continuous method to know the major sample time acceptable. This method has some limitations especially in the discretization of non-linear models.

The phasor method is applied to linear circuits when the interest is to analyze changes in magnitude and phase of voltages and currents in the system. This method does not need to solve all the differential equations resultant from the resistive, inductive and capacitive elements interaction. The method replaces the network differential

equations by a set of algebraic equations. The state-space network model is replaced by a complex matrix evaluated in its fundamental frequency that relates its inputs and outputs (voltages and current phasors). Because the electric states are ignored, the phasor method solution does not require a particular solver to solve the electric system. For this reason the simulation is executed faster. A disadvantage is that this method solves the system for a particularly frequency only.

The ship's power system only with the quantity of electric components is complex enough. Adding the Stateflow blocks used to simulate the controller we create an even more complex system. The method used to solve the system with IPR's was the phasor method for the reasons described previously in the method explanation. The other two methods were tested, but the simulation time was extremely long and its use is not practical.

Our main interest is to analyze the system reconfiguration capacity in reaction to different contingency scenarios, so a detailed analysis of voltages and currents is not necessary. Knowing the magnitude of voltages and currents magnitude in the system loads, generators and lines we can calculate the real power and make the IPR's ICCU react and calculate a new switch arrangement when the contingency occurs.

7.1 Contingencies

The reconfiguration scenarios were divided into three contingencies categories: isolated, non-simultaneous and simultaneous. In each one of these categories different system transmission lines were chosen for opening its switch and simulating an attack or fault. Figure 7.3 identifies all the power network lines.

To obtain the total served load percent by scenario after the IPR's have acted to reconfigure the system, the equation 7.1 was used. This equation gives a weight to each priority where the major weight is assigned to the vital loads.

$$total\ \ served\ \ load\ \ \% = \frac{\left(N_1 * W_1 + N_2 * W_2 + N_3 * W_3\right)}{\left(T_1 * W_1 + T_2 * W_2 + T_3 * W_3\right)} * 100 \tag{7.1}$$

Where: N_x = # of loads priority x served.
T_x = # of total loads priority x.
W_x = priority x weight. ($W_1 = 100, W_2 = 10, W_3 = 1$)

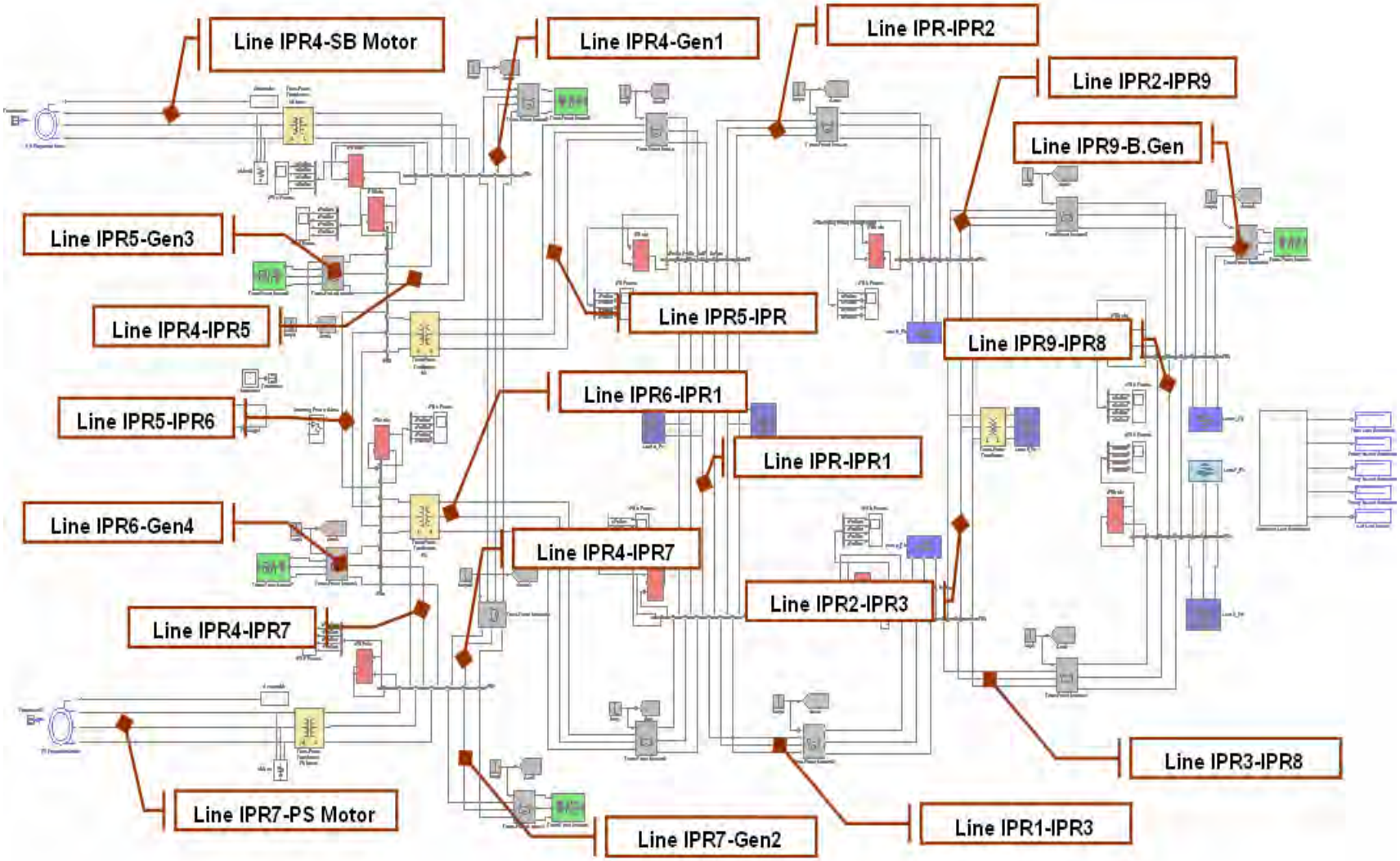

Figure 7.3 Identification of System Transmission Lines.

7.1.1 Scenario 1: Isolated Contingency

This first scenario simulates an attack where zones in the ship will remain isolated and supplied by a backup generator. The attack occurs in the line IPR5-IPR at 0.5s after the simulation started. This attack leaves without service the majority of the loads located on the ship's starboard. The auxiliary generators have a capacity of 100 kW each one and the backup generator 45 kW. Figure 7.4 shows the attacked line and the loads that lose their power.

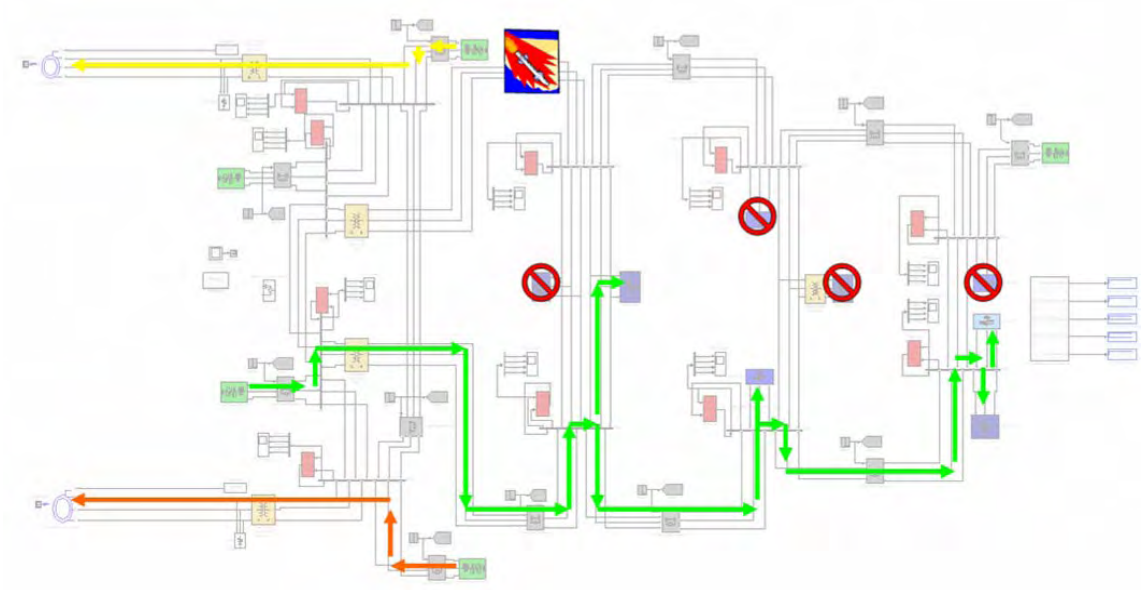

Figure 7.4 Attacked Line for Scenario #1.

Tables 7.1 and 7.2 summarize the data of the reconfiguration scheme achieved by the IPR's for scenario number one. The times in which the loads were reconfigured remained below 1 second. All the loads were reconfigured with the available generation. Figure 7.5 shows the current flowing through several of the components during the simulation and figure 7.6 the power flows obtained after the reconfiguration.

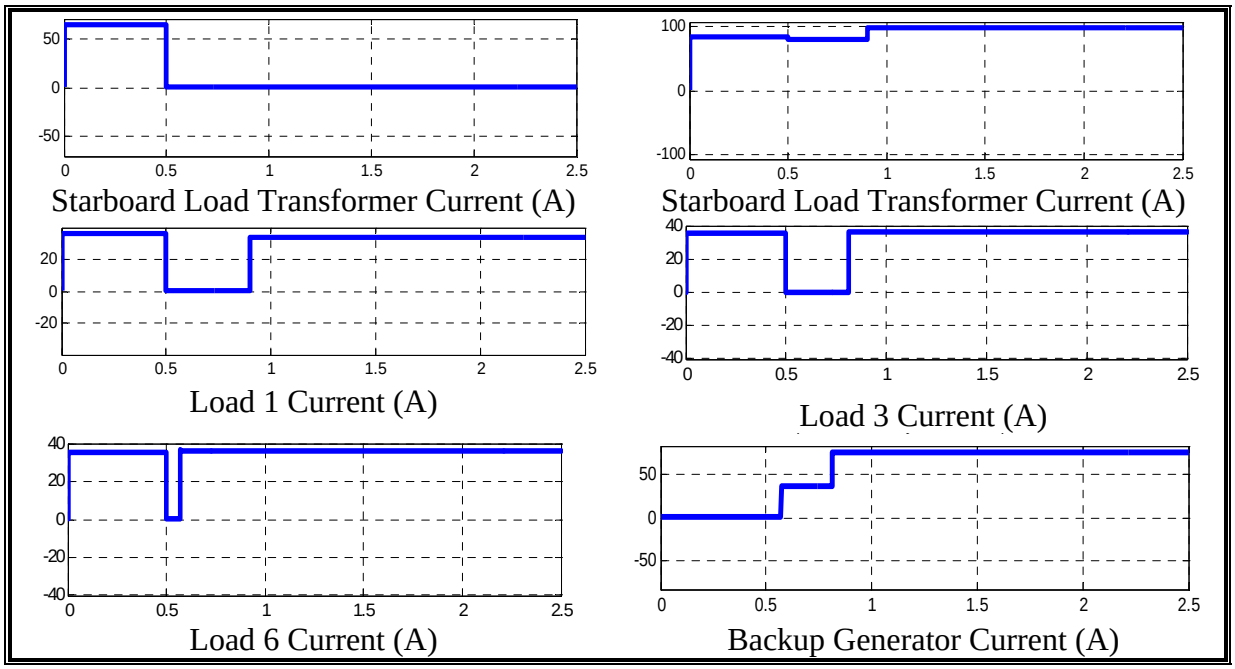

Figure 7.5 Current Magnitude Plots of System Components for Scenario #1.

TABLE 7.1 Reconfiguration Time Data of Affected Loads for Scenario #1.

Affected Load	1	3	5	6
Power Loss Time (s)	0.5	0.5	0.5	0.5
Reconfiguration Time (s)	0.9	0.8	0.8	0.55
Time Difference (s)	0.4	0.3	0.3	0.05

TABLE 7.2 Percent of Affected Reconfigured Loads for Scenario #1.

Load Priority	1	2	3
Affected Loads Served	2 of 2	2 of 2	0 of 0
% of affected loads served	100%	100%	100%
% of total affected loads served	100%		

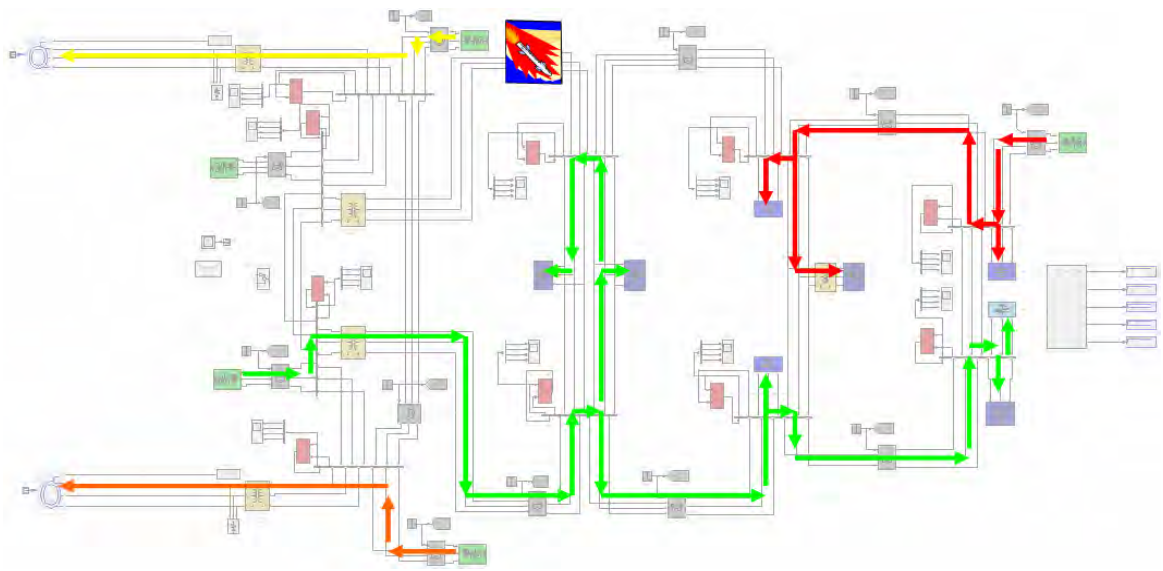

Figure 7.6 Reconfiguration Power Flow Scheme for Scenario #1.

7.1.2 Scenario 2: Simultaneous Contingencies

The second scenario has the objective of showing the IPR's capacity to react independently of other IPR's. Three faults in different ship zones occur simultaneously at 1.2s of simulation time. The faults occur in lines IPR4-Gen1, IPR6-IPR1 and IPR2-IPR9. Six system loads lose power including the starboard propulsion motor. Figure 7.7 shows the faults locations and the loads that were affected.

For this scenario a capacity of 800 kW was assigned to each one of the main generators, implying that a single generator can supply the two propulsion motors. A capacity of 100 kW was assigned to each one of the auxiliary generators and 50 kW to the backup generator. Figure 7.8 shows the current flowing through several of the system components during the reconfiguration scheme.

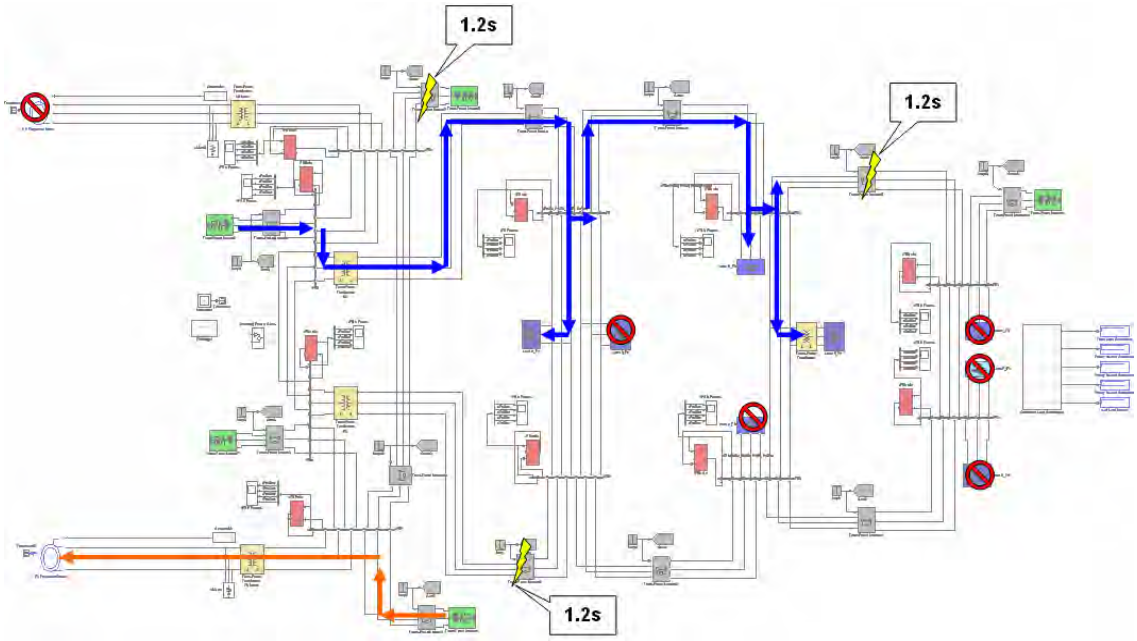

Figure 7.7 Disconnection Times for Lines of Scenario #2.

Tables 7.3 and 7.4 show all the reconfiguration scheme data for scenario number two. One number three priority load (non-vital) could not be reconfigured by the IPR' s due to two reasons: a) the backup generator neither the auxiliary generator number three had the sufficient capacity to supply it, and b) the zone remained partly isolated, what requires a more advanced reconfiguration algorithm and also more time for the IPR's to react. Figure 7.9 shows the power flows achieved by the IPR's for scenario number 2.

TABLE 7.3 Reconfiguration Time Data of Affected Loads for Scenario #2.

Affected Load	Starboard Motor	2	4	6	7	8
Power Loss Time (s)	1.2	1.2	1.2	1.2	1.2	1.2
Reconfiguration Time (s)	1.75	1.75	2.3	1.3	N/A	1.55
Time Difference (s)	0.55	0.55	1.1	0.1	N/A	0.35

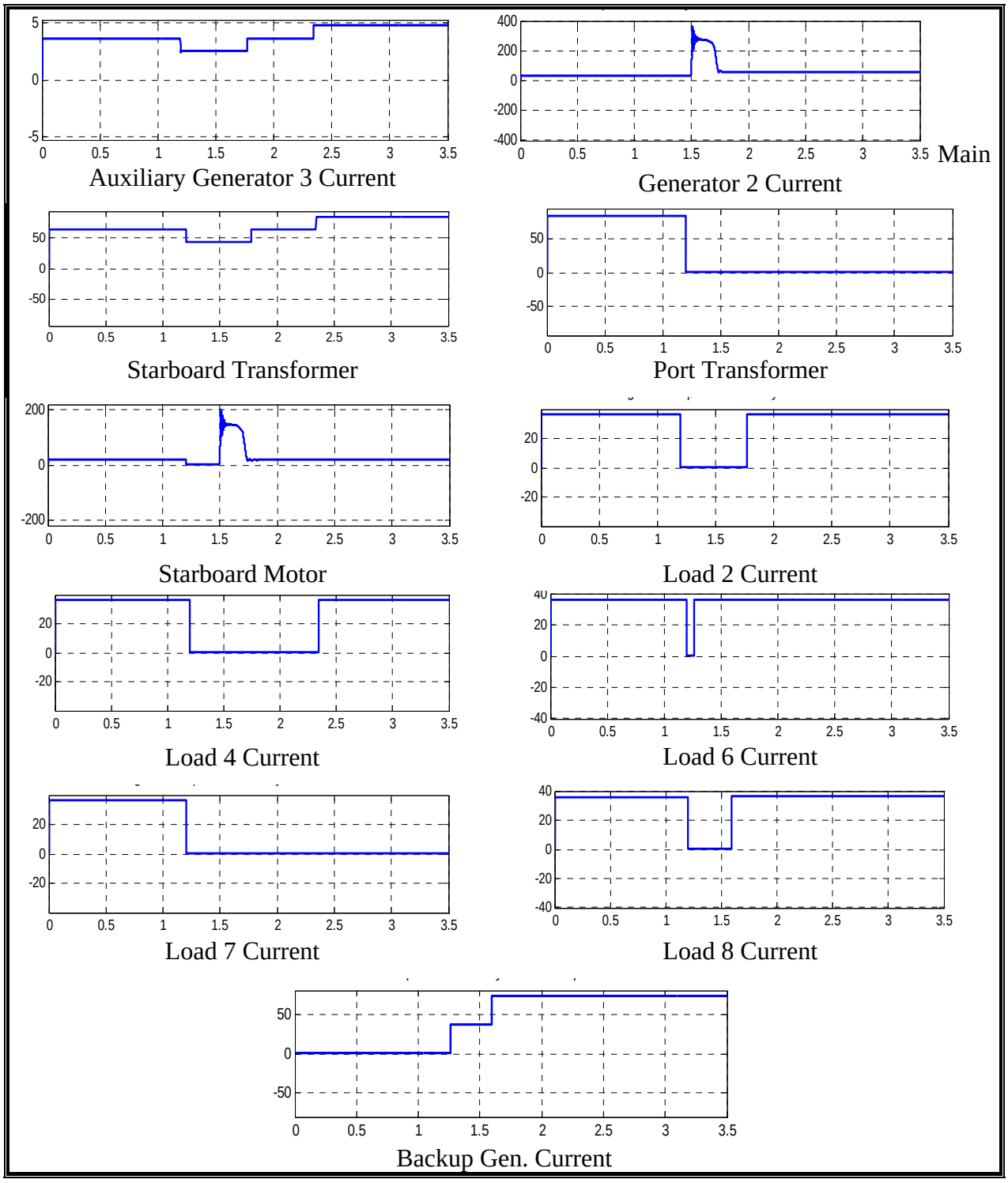

Figure 7.8 Current Magnitude Plots of System Components for Scenario #2.

TABLE 7.4 Percent of Affected Reconfigured Loads for Scenario #2.

Load Priority	1	2	3
Affected Loads Served	3 of 3	2 of 1	0 of 1
% of affected loads served	100%	100%	0%
% of total loads served	99%		

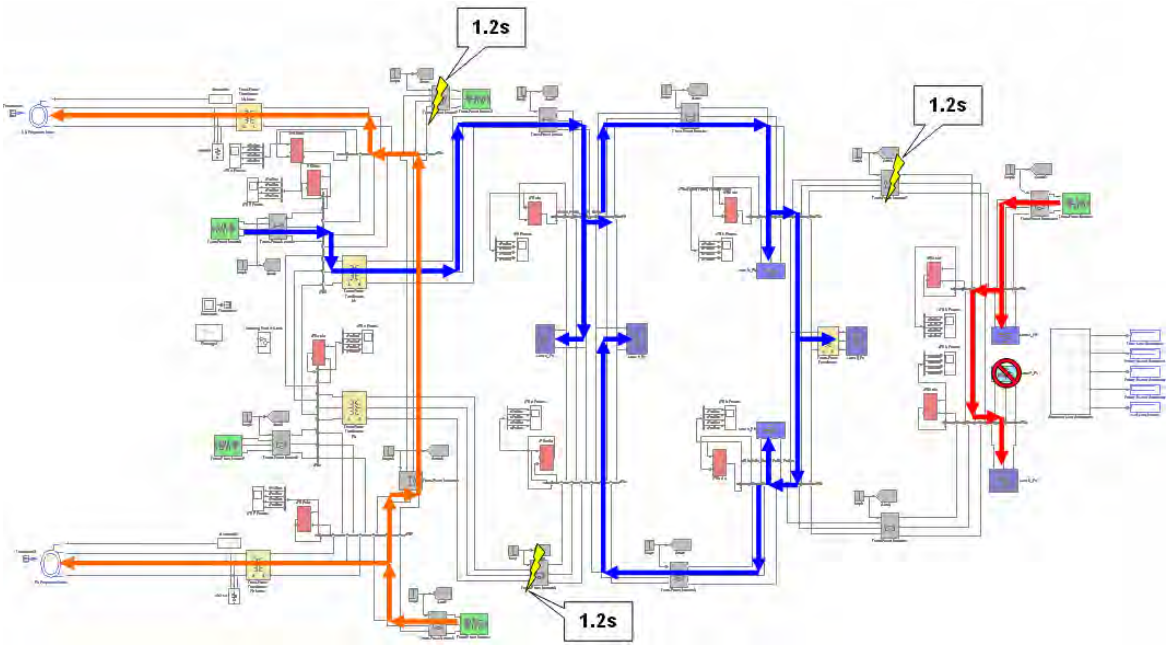

Figure 7.9 Reconfiguration Power Flow Scheme for Scenario #2

7.1.3 Scenario 3: Non-Simultaneous Contingencies

Table 7.5 shows a summary of the times and the lines that were disconnected for scenario number three. All the service zone loads lose their power because the auxiliary generators were disconnected by the protection system. For this scenario the backup generator has a power capacity of 120 kW while the main generators have a capacity of 400 kW each one. Figure 7.10 shows the disconnected lines simulating a fault or attack

and the time in which they were disconnected. Figure 7.11 shows the current behavior in several of the systems components during the simulation.

TABLE 7.5 Disconnected Lines for Scenario #3.

Affected Line	IPR5 - Gen3	IPR6 - Gen4	IPR - IPR2	IPR3 - IPR8
Disconnection Time (s)	1.3	1.8	2.4	3.0

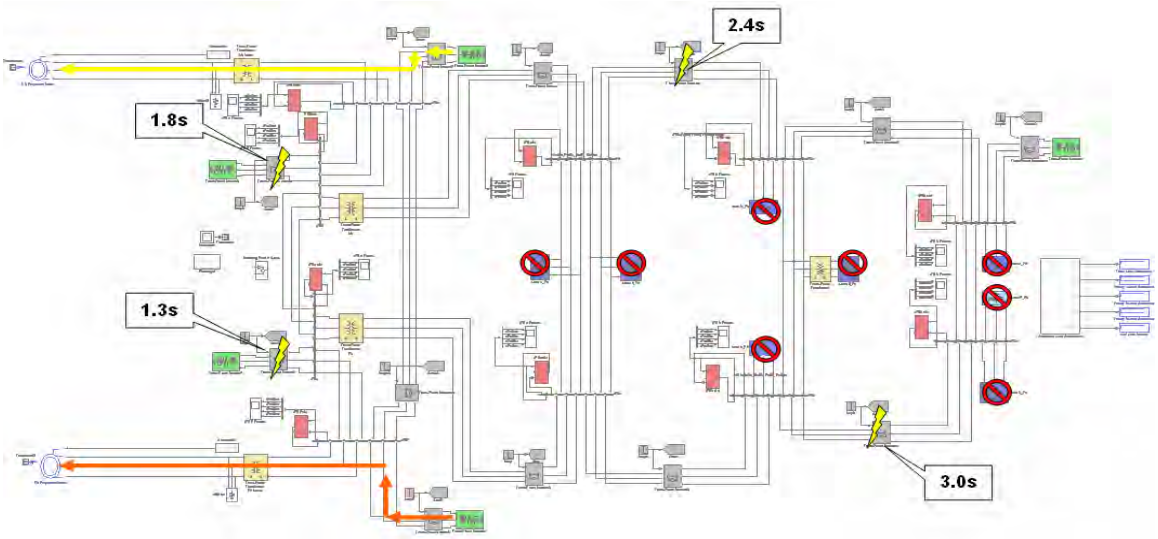

Figure 7.10 Disconnection Times for Lines of Scenario #3.

Table 7.6 and 7.7 summarizes the reconfiguration scheme data achieved by the IPR's for scenario number three. All the loads were supplied in an acceptable time. The backup generator supplies five of the service loads, being at its maximum capacity. The main generators supply two of the priority one loads remaining almost at their maximum capacities. In figure 7.12 we can observe the power flow of each generator after executing the IPR's reconfiguration scheme.

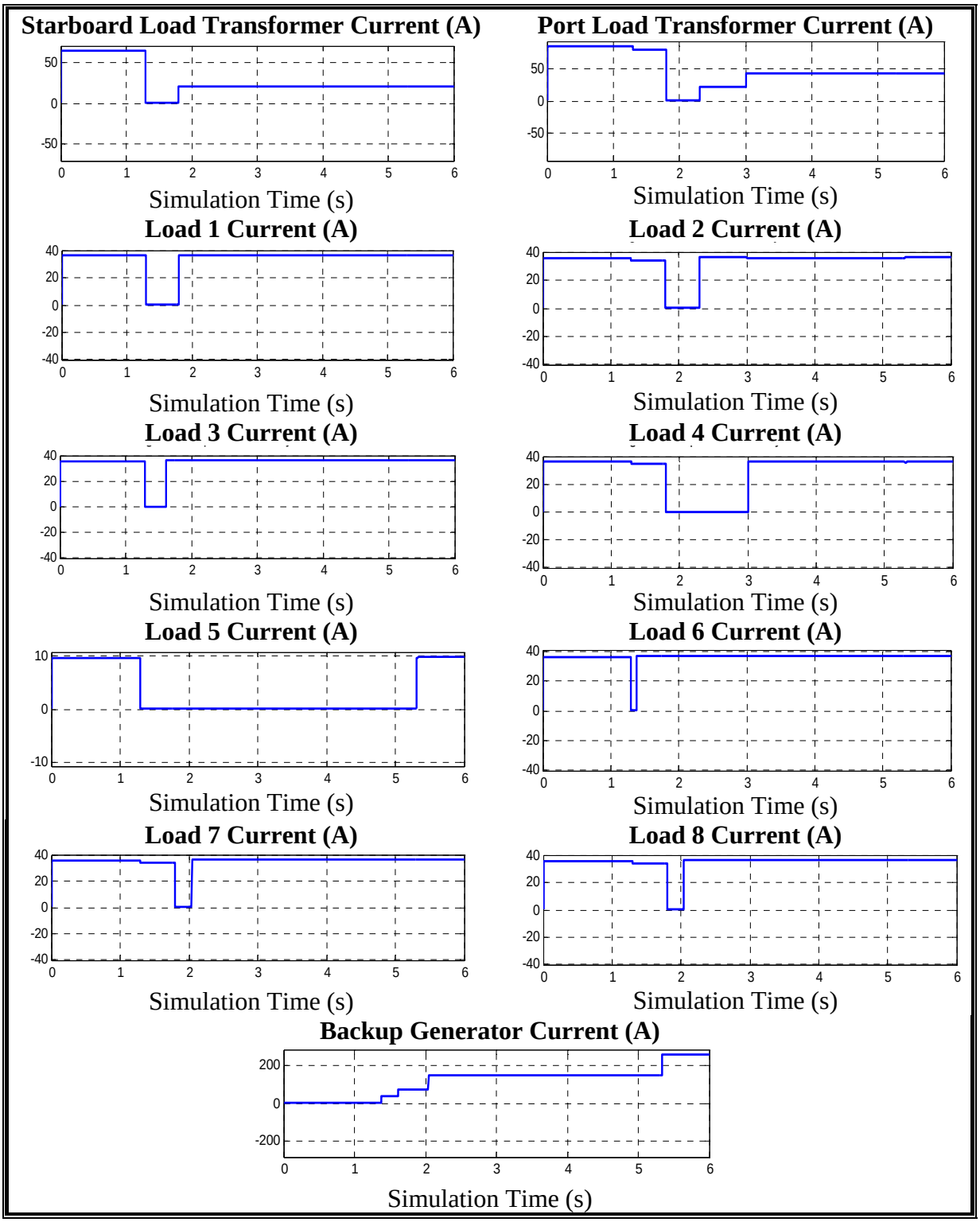

Figure 7.11 Current Magnitude Plots of System Components for Scenario #3.

TABLE 7.6 Reconfiguration Time Data of Affected Loads for Scenario #3.

Affected Load	1	2	3	4	5	6	7	8
Power Loss Time (s)	1.3	1.8	1.3	1.8	1.3	1.3	1.8	1.8
Reconfiguration Time (s)	1.8	2.3	1.6	3	5.3	1.4	2	2.1
Time Difference (s)	0.5	0.5	0.3	1.2	4	0.1	0.2	0.3

TABLE 7.7 Percent of Affected Reconfigured Loads for Scenario #3.

Load Priority	1	2	3
Affected Loads Served	4 of 4	3 of 3	1 of 1
% of affected loads served	100%	100%	100%
% of total affected loads served	100%		

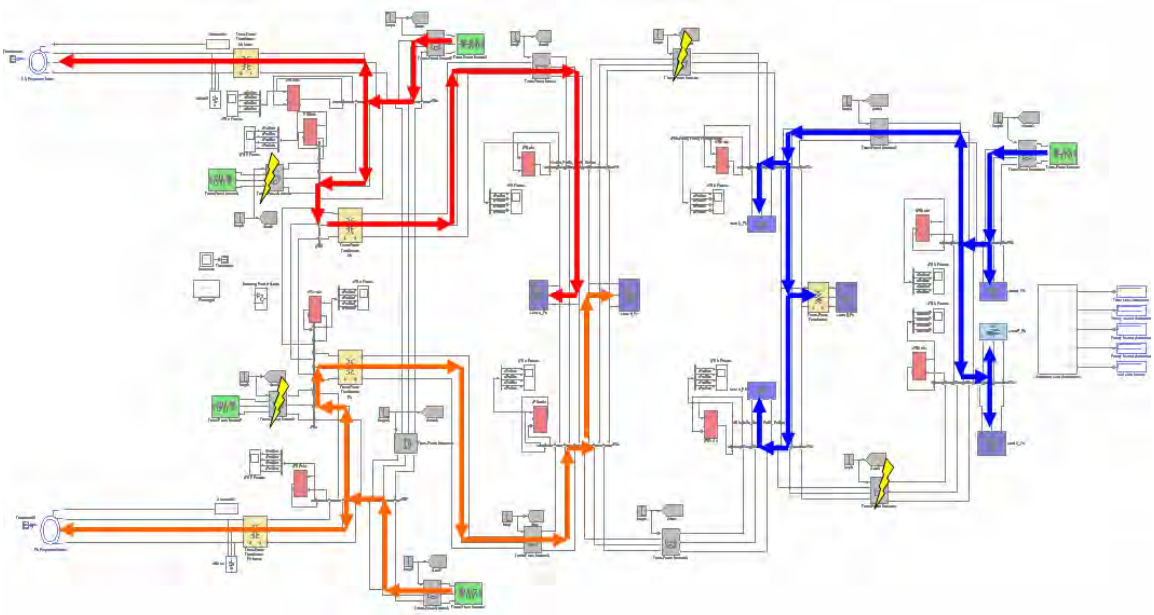

Figure 7.12 Reconfiguration Power Flow Scheme for Scenario #3.

These three scenarios presented show only some of the IPR's reconfiguration capacities. Many more scenarios were tested and in the majority of the cases the IPR's were able to supply all of the system vital loads.

8 POWER ELECTRONICS APPLICATIONS ON NAVAL SYSTEMS

The power electronics area is making a great impact in naval propulsion, distribution and communication systems. New materials and components such as power semiconductor devices and Power Electronics Building Blocks (PEBBS) will allow future marine systems to be more efficient and comply with stronger design requirements such as greater power density and cost-effectiveness. To be able to carry out the transition from mechanical to electrical propulsion, the Navy needs power electronics equipment that does not increase the size of the ship and facilitate the use of acoustic minimization techniques that render the ship invisible to the enemy. This requires a very high power quality for the propulsion motors, which can be acquired using electric drives that combine step mode switching and pulse width modulation (PWM) techniques, providing very low torque pulsations. Because multiple harmonics are being cancelled, the acoustic noise and vibration will be reduced [25]. The high efficiency electric drives could be connected to the IPR's, so they can be automatically reconfigured, obtaining an optimum operation or recovery in battle scenarios.

Ships will be designed to meet the functional requirements of a mission with the minimum number of boxes using mass-produced programmable power electronics building blocks (PEBBs) instead of a box for each mission function, as is the case today [26]. The PEBB is a device that integrates power semiconductor devices, gates drives, and other components in a single construction block. This results in less cost, weight, size, and in less application effort on power electronics systems maintenance. Every

power electronic block integrates input/output filters, power switching control and thermal management. These elements can be used to describe all the power electronics components independently of the topology in which they are connected, whether for a motor controller, inverter, rectifier, or switching device.

Like the IPR, the PEBB should obey the energy conservation physical laws of voltage, current, torque, force, etc. In this way, the PEBB can become a modular device that connected with the IPR will provide total control on an electric network in terms of energy management and configuration. Many reasons exist to believe that the costs of power electronics can be reduced significantly by the use of the building block concept. This focus will result in an increase of the power electronics market in the industrial, utilities, and transportation areas among others.

The plug and play architecture idea converts the power systems in personal computers where the PEBB's and IPR's connected will be automatically reconfigured to know the devices that will serve and the operation requirements [25]. Figure 8.1 shows the PEBB proposed model defined by the IEEE Power Engineering Society. As can be observed, the PEBB realizes the necessary electric function, by programming its software. Some of the software functions in which the PEBB can work is: inverter, breaker, frequency converter, motor controller, and power supply and actuator controller.

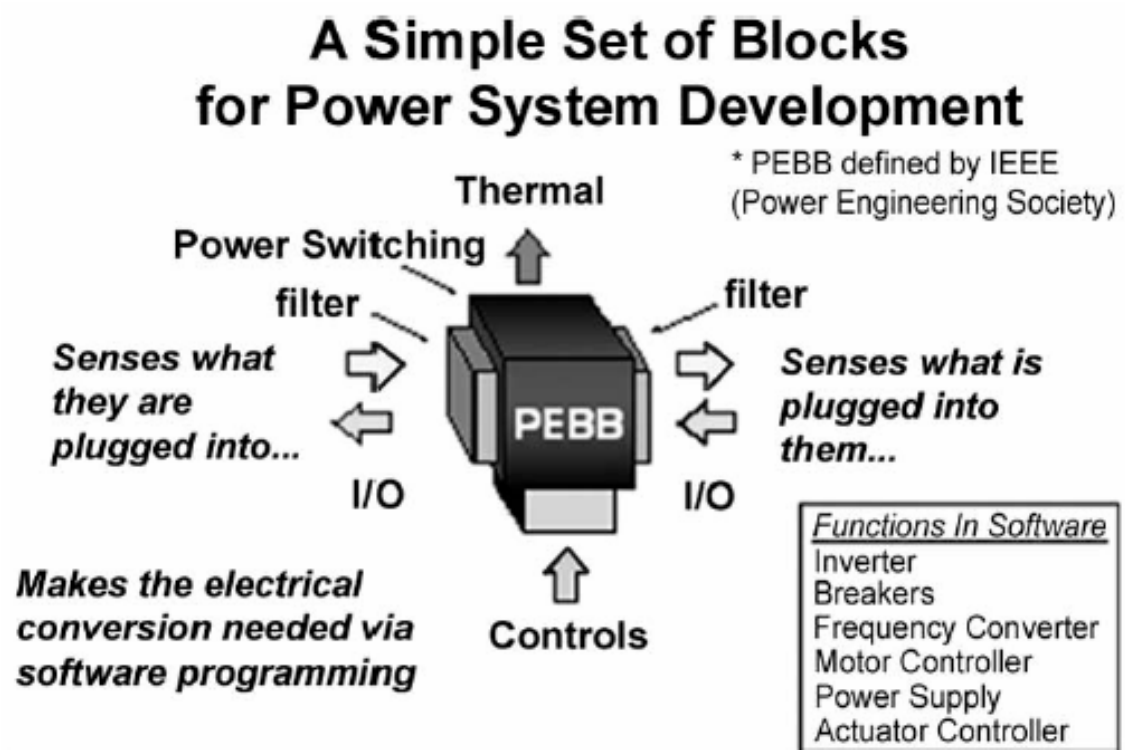

Figure 8.1: Power Electronics Building Block (PEBB) Model.

Our future work idea is to link the PEBB with the IPR. To achieve it, we proposed to change the IPR architecture placing PEBB's instead of breakers inside the sensors and switches modules. In this way we will have a single type IPR capable to work in AC and DC zones. The motors and loads working at different frequencies will be directly supplied from the IPR because the PEBB's will be programmed to operate these kinds of devices. Figure 8.2 shows the sensors and switches module proposed with PEBB's instead of breakers. Due to time limitations we leave the implementation of PEBB-based IPR’s for future work.

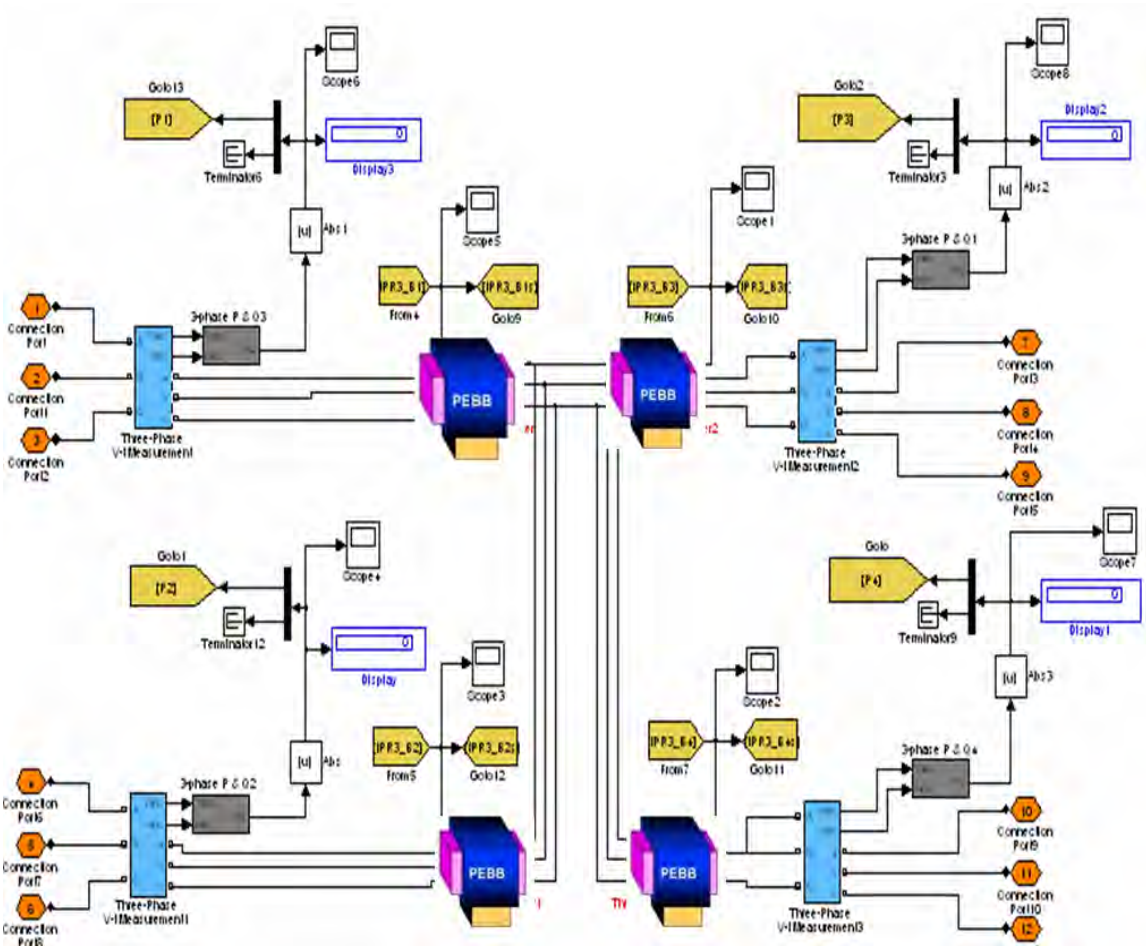

Figure 8.2: IPR Sensors and Switches Module Implemented with PEBB's.

9 CONCLUSIONS

We have developed and verified the Intelligent Power Router (IPR) functionality as a modular device of decentralized control in future naval shipboard power system. We created a new simulation platform that permits a detailed time-domain analysis of the behavior of power networks based on IPR's. The IPR building block permits a more organized arrangement of complex power distribution networks, complying with the proposed design objectives of: survivability and fault tolerance, scalability, cost-effectiveness and unattended 24/7 operation.

In this first version, the IPR components were simulated using ideal model blocks found in the SimPowerSystems and Simulink libraries. They give us a very realistic idea of the behavior that real system devices would have. The simulation platform has the advantage that it integrates different systems areas such as electricity and control, which facilitates the IPR integration into the future ship DD(X) power system model. The control logic implementation developed with state machines, facilitate the implementation of the reconfiguration algorithm and information exchange protocol. The control logic can be further optimized to cover more contingencies and to detect more complex disturbances, beyond real power losses in loads.

.

The introduction of the IPR not only allows the system reconfiguration in case of some problem, but also facilitates changes to the topology of a shipboard power system

to adapt to dynamic changes in the ship's mission requirements. The IPR concept changes the conventional way to design electric systems of this type. Now the designer has a new modular tool that will allow the connection of service loads, generators, weapons, communication and propulsion systems, organized by priority for easy handling at reconfiguration. Other advantages include the easy addition of new electric zones gradually to the ship network and the lack of the requirement to have a central control center with lots of human intervention.

As it was expected, the IPR's controlled power system had a greater performance compared to a system without any intelligence. The IPR objective is to reconfigure the vital loads in the smaller possible time for avoiding that critical weapons, communication and propulsion systems remain without energy. After that, another type of algorithm can be applied to supply other smaller priority loads if sufficient generation remains available. Our work shows the automated reconfiguration capacity achieved with the IPR in a modular and decentralized manner. We can conclude that an IPR investment is completely justified because it will improve the survivability, reliability and security of any system.

10 FUTURE WORK

The work presented in this dissertation shows the first developed version of an IPR. Our models can be improved in many ways both in terms of its hardware and software. The power system model used for the experiments doesn't have a DC zone whose application is of great importance for the future electric networks.

10.1 Future IPR Hardware

Some IPR's hardware components that should be developed to obtain an improved second version of the IPR are the following:

- Parameters Sensors – measuring other system parameters like frequency, phase and reactive power among others, will do possible to detect fluctuations and more specific problems. We will be able also to seek effective solutions for power quality problems.
- Controller - changing the controller logic that now uses state machines by a program running in a microprocessor, will do able to increase the controller's reaction speed and at the same time diminish the system reconfiguration time.
- Interfacing Circuits & Switches - implementing more advanced interfacing circuits and switches will do able to simulate the data exchange and IPR's commutation time in a more realistic way. Different technologies like wireless systems, optical fiber and power electronics components mentioned

in chapter eight could be tested to measure the reliability that they introduces to the IPR.

- Energy Storage Devices – incorporating energy storage devices will do possible to reconfigure isolated zones of the ship affected by battle damage. These devices can be used as distributed generators each one connected in different zones of the ship.

10.2 DC Zone Integration

There is not a single topology that officially defines the type of energy that will be used in future shipboard power systems. With the energy type we refer to AC, DC or a combined system. The combined system is actually the most popular among the researcher's community. For this reason, we recommend, as future work, to add to the electric network a DC zone with its respective loads and power electronics converters. Besides having a more complete system will be able to study the effects caused by the power electronics devices in the system.

The developed IPR is qualified to work in AC; therefore for integrating it into a DC zone, some structural changes will be necessary. The changes would be mainly reflected in the devices used as switches (breakers), in the system measured parameters and in the quantity of power input/output ports. The PEBB will be an excellent implementation option.

REFERENCES

[1] K.L. Butler-Purry and N.D.R. Sarma McCoy, "Intelligent Network Reconfiguration of Shipboard Power Systems", *Power Engineering Society General Meeting*, July 2003

[2] E.L Zivi, "Integrated Shipboard Power and Automation Control Challenge Problem", *Power Engineering Society Summer Meeting*, Vol. 1, pp. 325-330, July 2002

[3] J.G. Ciezki and R.W. Ashton, "Selection and Stability Issues Associated with a Navy Shipboard DC Zonal Electric Distribution System", *IEEE Transactions on Power Delivery*, Vol.15, No.2, pp. 665-669, April 2000

[4] K.L. Butler, N.D.R. Sarma, C. Whitcomb, H. DoCarmo and H. Zhang, "Shipboard Systems Deploy Automated Protection", *IEEE Computer Application in Power*, Vol. 11, Issue 2, pp. 31-36, April 1998

[5] Agustín A. Irizarry-Rivera, Manuel Rodríguez, Miguel Vélez-Reyes, José R. Cedeño, Bienvenido Vélez, Efraín O'Neill-Carrillo, and Alberto Ramírez, "Intelligent Power Routers for Distributed Coordination in Electric Energy Processing Networks", *Proceedings of the 2003 EPNES Workshop*, Orlando, Florida, October 23-24, 2003.

[6] E.L. Zivi and T.J. McCoy, "Control of a Shipboard Integrated Power System", *Energy Systems Analysis Consortium*, Vol. 4, pp. 13-17, May 1999

[7] NSF/ONR Partnership in Electric Power Networks Efficiency and Security (EPNES), Program Solicitation NSF 02-041, December 2001 http://www.nsf.gov/cgi-bin/getpub?nsf02041

[8] ONR / NSF EPNES Control Challenge Problem Website, http://www.usna.edu/EPNES

[9] Opportunities & Challenges in Ship Systems & Control at ONR, presented by Dr. Albert Tucker, *40th IEEE Conference on Decision and Control*, December 2001, http://www.usna.edu/EPNES/Challenge_Problem.htm

[10] ONR 334 Ship Hull, Mechanical & Electrical Systems Science and Technology Division Website, http://www.onr.navy.mil/sci_tech/engineering/334_shiphull/default.htm

[11] C. Hadjicostis, "Non-Concurrent Error Detection and Correction in Discrete-Time LTI Dynamic Systems", *Proceedings of the 40th IEEE Conference on Decision and Control*, December 2001.

[12] Naval Sea Systems Command, Enginnering Directorate, Electrical Engineering Group, *NAVSEA Design Practice and Criteria Manual for Electrical Systems for Surface Ships*, Chapter 300

[13] H. Zhang, K.L. Butler, N.D.R. Sarma, H. DoCarmo, S. Gopalakrishnan and A. Adediran, "Analysis of tools for simulation of Shipboard Electric Power Systems", *Electric Power Systems Research*, pp. 111-122, February 2001

[14] H. Zhang, K.L. Butler and N.D.R. Sarma, "Simulation of Ungrounded Shipboard Power Systems in Pspice", *Proceedings of Midwest Symposium on Circuits and Systems*, pp.58-62, August 1998

[15] C. Petry and J. Rumburg, "Zonal Electrical Distribution Systems: An Affordable Architecture for the Future", *Naval Engineers Journal*, Vol.105, pp. 45-51, May 1993

[16] S. Khushalani and N.N. Schulz, "Optimized Restoration of Shipboard Power Systems with IPS Architecture and Distributed Generation", *Reconfiguration and Survivability Symposium*, 2005

[17] J. Beno, A. Ouroua, M.Flynn, "Effect of EM weapons requirements on the electric ship power system", *IMAREST Engine as a Weapon 2004*, June 2004

[18] T. Nagata, Y. Tao, H. Sasaki and H. Fujita, "A Multi-agent approach to Distribution System Restoration", *The 2004 47th Midwest Symposium on Circuits and Systems*, Vol.2, pp. 655-660, July 2004

[19] G.I. Nemhauser and L.A. Wolsey, *Integer and Combinatorial Optimization*, Wiley Interscience Publications, pp. 495-513, 1988

[20] K.L. Butler, N.D.R. Sarma and V.R. Prasad, "A New Method of Network Reconfiguration for Service Restoration in Shipboard Power Systems", *IEEE Transmission and Distribution Conference*, Vol.2, pp. 658-662, April 1999

[21] K.L. Butler, N.D.R. Sarma and V.R. Prasad, "Network Reconfiguration for Service Restoration Shipboard Power Distribution Systems", *IEEE Transactions on Power Systems*, Vol.16, pp. 653-661, November 2001

[22] K.L. Butler and N.D.R. Sarma, “General Reconfiguration Methodology for AC Radial Shipboard Power Systems”, *IEEE Power Engineering Society Winter Meeting*, Vol.2, pp. 1226-1230, January 2000

[23] K. Davey and R. Hebner, “Reconfiguration of Shipboard Power Systems”, *IASME Transactions*, Vol.1, pp. 241-246, April 2004

[24] A. Ouroua, L. Domashk and J.H. Beno, “Electric Ship Power System Integration Analyses through Modeling and Simulation”, *2005 IEEE Electric Ship Technologies Symposium*, pp. 70-74, July 25-27 2005

[25] T. Ericsen, N. Hingorani and Y. Khersonsky, “Power electronics and Future Marine Electrical Systems”, *IEEE Transactions on Industry Applications*, Vol.42 Issue 1, pp. 155-163, Jan-Feb 2006

[26] T. Ericsen and A. Tucker, “Power electronics building blocks and potential power modulator application”, *Proc. 23rd Int. Power Modulator Symposium*, Rancho Mirage CA, pp. 12–15, Jun. 1998

APPENDIX A. STATEFLOW CONTROLLER SUPERSTATES AND MAIN TRANSITIONS

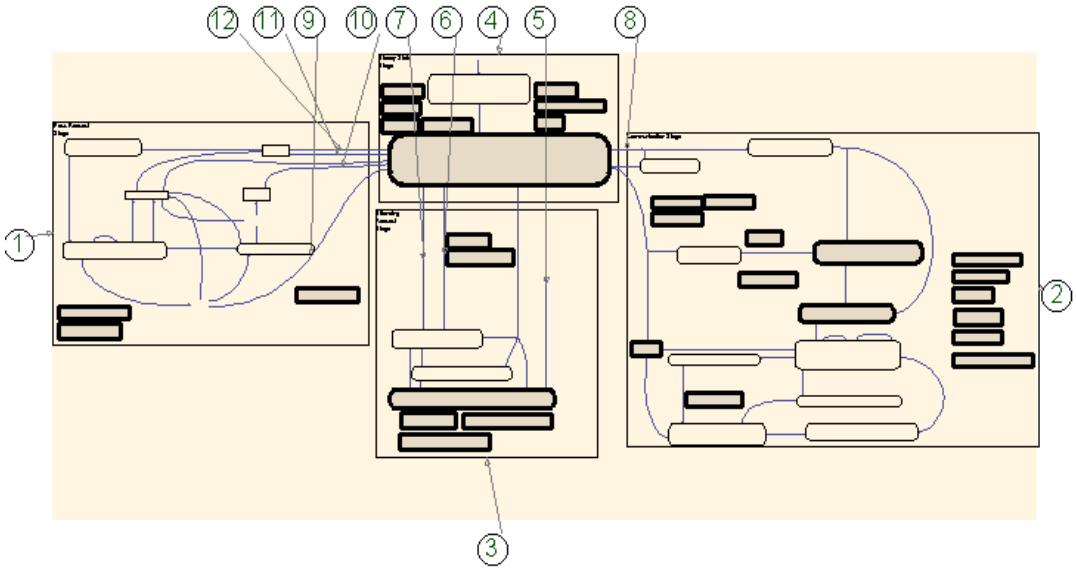

(1) Pass
(2) Communication
(3) Attending
(4) Steady
(5) [IPR_i_data[request_flag][1] ...
(6) [IPR_i_data[request_flag][1]=...
(7) [request_flag != 0 && IPR_tot...
(8) [port_with_problem != 0]
(9) [IPR_i_data[request_flag][1]=...
(10) [IPR_i_data[IPR_response[2]][...
(11) [request_flag != 0 && IPR_tot...
(12) {IPR_o_data[request_flag][1]=...

APPENDIX B. STEADY STATE SUPER-STATE

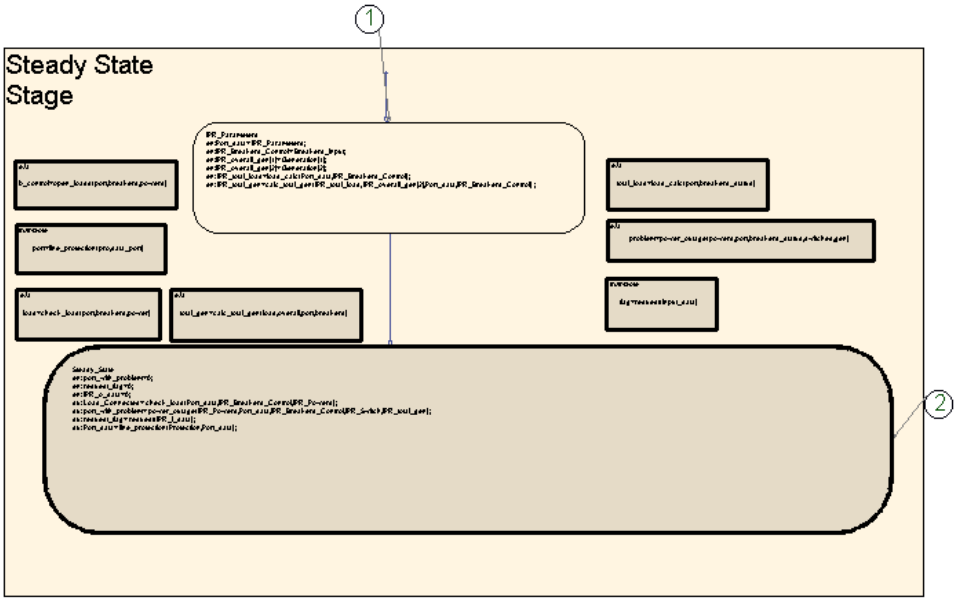

(1) IPR_Parameters

(2) Steady_State

APPENDIX C. CONTINGENCY DETECTED SUPER-STATE

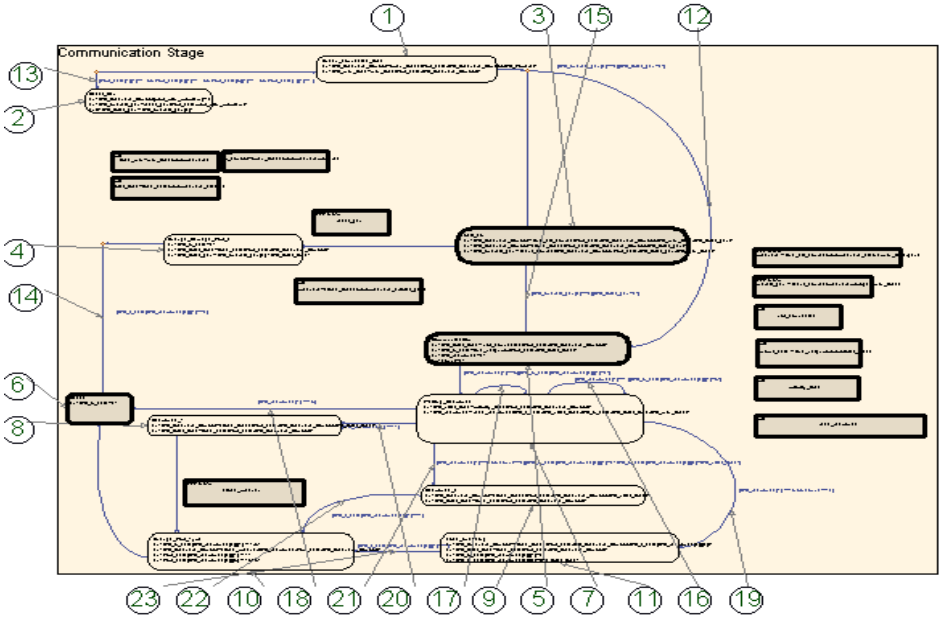

(1) Check_connected_load

(2) Reset_Gen

(3) Self_Fix

(4) Change_Damage_Port_2

(5) Communication

(6) Reset

(7) Waiting_Response

(8) Response_1

(9) Response_2

(10) Change_Port_Type

(11) Load_Shedding

(12) [IPR_overall_gen[2]==0]{IPR_t.

(13) [Port_data[1][1]!=4 && Port_d...

(14) [IPR_i_data[IPR_response[2]][...

(15) [IPR_overall_gen[2]==0]{IPR_t...

(16) [IPR_response[1]==4]{IPR_o_da...

(17) [IPR_response[1]==5]{IPR_o_da...

(18) [IPR_response[1] == 6]

(19) [IPR_response[1] == 3 && coun...

(20) [IPR_response[1] == 1]

(21) [IPR_response[1]==2 && count=...

(22) [IPR_i_data[IPR_response[2]][...

(23) [IPR_i_data[IPR_response[2]][...

APPENDIX D. ATTENDING REQUEST SUPER-STATE

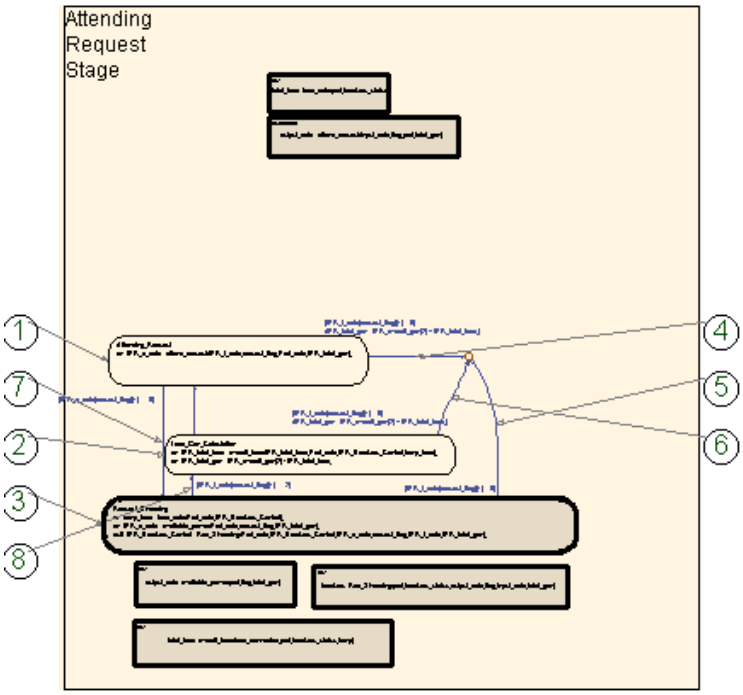

(1) Attending_Request

(2) Load_Gen_Calculation

(3) Request_Shedding

(4) [IPR_i_data[request_flag][1]=...

(5) [IPR_i_data[request_flag][1]==0]

(6) [IPR_i_data[request_flag][1]=...

(7) [IPR_o_data[request_flag][1] ...

(8) [IPR_i_data[request_flag][1] ...

APPENDIX E. REQUEST BROKER SUPER-STATE

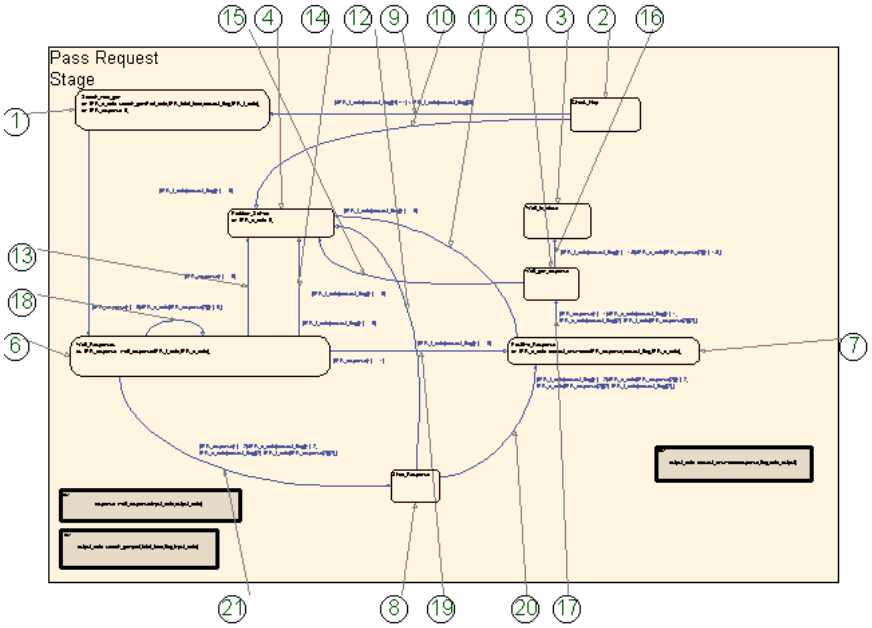

(1) Search_near_gen

(2) Check_Hop

(3) Wait_to_close

(4) Problem_Solved

(5) Wait_gen_response

(6) Wait_Responses

(7) Positive_Response

(8) Shed_Response

(9) [(IPR_i_data[request_flag][4]...

(10) [IPR_i_data[request_flag][1] ...

(11) [IPR_i_data[request_flag][1] ...

(12) [IPR_i_data[request_flag][1] ...

(13) [IPR_response[1] == 6]

(14) [IPR_i_data[request_flag][1] ...

(15) [IPR_i_data[request_flag][1] ...

(16) [IPR_i_data[request_flag][1]=...

(17) [IPR_response[1]==1]{IPR_o_da...

(18) [IPR_response[1]==5]{IPR_o_da...

(19) [IPR_response[1] == 1]

(20) [IPR_i_data[request_flag][1]=...

(21) [IPR_response[1]==2]{IPR_o_da...